LIST OF EFFECTIVE PAGES

Chapter 38
WATER/WASTE

CHAPTER	PAGE	DATE	CODE
*38	i	Sep. 10/63	AB-3
*38	ii	Sep. 10/63	AB-2
*38	1	Sep. 10/63	AB-2
38	2	Feb. 21/63	AB-2
38	3	Nov. 3/61	AB-1
	BLANK		
38-0	1	Feb. 21/63	AB-2
	BLANK		
*38-1-0	1	Sep. 10/63	AB-2
*38-1-0	2	Sep. 10/63	AB-3
38-1-0	3	Feb. 21/63	AB-2
*38-1-0	4	Sep. 10/63	AB-2
38-1-0	5	Nov. 3/61	AB-1
38-1-0	6	Nov. 3/61	AB-1
*38-1-0	7	Sep. 10/63	AB-3
*38-1-0	8	Sep. 10/63	AB-2
*38-1-0	9	Sep. 10/63	AB-3
38-1-0	10	Feb. 21/63	AB-2
*38-1-0	11	Sep. 10/63	AB-2
	BLANK		
38-1-0	101	Nov. 3/61	AB-1
*38-1-0	102	Sep. 10/63	AB-2
*38-1-0	103	Sep. 10/63	AB-2
*38-1-0	104	Sep. 10/63	AB-2
38-1-0	105	Feb. 21/63	AB-2
38-1-0	106	Feb. 21/63	AB-1
38-1-0	201	Nov. 3/61	AB-1
38-1-0	202	Feb. 21/63	AB-2
38-1-0	203	Nov. 3/61	AB-1
38-1-0	204	Nov. 3/61	AB-1
38-1-0	205	Feb. 21/63	AB-2
38-1-0	206	Nov. 3/61	AB-1
*38-1-1	201	Sep. 10/63	AB-2
38-1-1	202	Feb. 21/63	AB-2
38-1-1	203	Nov. 3/61	AB-1
38-1-1	204	Feb. 21/63	AB-2
38-1-1	205	Nov. 3/61	AB-1
*38-1-1	206	Sep. 10/63	AB-1
*38-1-1	207	Sep. 10/63	AB-1
	BLANK		
38-1-2	201	Nov. 3/61	AB-1
38-1-2	202	Feb. 21/63	AB-2
38-1-3	201	Feb. 21/63	AB-2
	BLANK		
*38-1-4	201	Sep. 10/63	AB-2
38-1-4	202	Nov. 3/61	AB-1
38-1-5	201	Nov. 3/61	AB-1
*38-1-5	202	Sep. 10/63	AB-2
*38-1-6	201	Sep. 10/63	AB-2
	BLANK		
*38-1-7	201	Sep. 10/63	AB-3
38-1-7	202	Feb. 21/63	AB-2
38-1-7	203	Feb. 21/63	AB-2
	BLANK		
38-1-8	201	Nov. 3/61	AB-1
	BLANK		
38-1-9	201	Nov. 3/61	AB-1
38-1-9	202	Nov. 3/61	AB-1
38-2-0	1	Nov. 3/61	AB-1
38-2-0	2	Nov. 3/61	AB-1
38-2-0	3	Nov. 3/61	AB-1
38-2-0	4	Nov. 3/61	AB-1
38-2-0	5	Nov. 3/61	AB-1
	BLANK		
38-2-0	101	Feb. 21/63	AB-2
38-2-0	102	Nov. 3/61	AB-1
38-2-0	201	Feb. 21/63	AB-2
38-2-0	202	Feb. 21/63	AB-2
38-2-1	201	Feb. 21/63	AB-2
38-2-1	202	Nov. 3/61	AB-1
38-2-2	201	Nov. 3/61	AB-1
38-2-2	202	Nov. 3/61	AB-1
38-2-2	203	Nov. 3/61	AB-1
	BLANK		
38-2-3	201	Feb. 21/63	AB-2
38-2-3	202	Nov. 3/61	AB-1
38-2-4	201	Nov. 3/61	AB-1
38-2-4	202	Nov. 3/61	AB-1
38-2-4	203	Feb. 21/63	AB-2
38-2-4	204	Feb. 21/63	AB-2
38-2-5	201	Nov. 3/61	AB-1
38-2-5	202	Nov. 3/61	AB-1
38-2-5	203	Feb. 21/63	AB-2
	BLANK		

* Pages revised, added or deleted by this revision.

LIST OF EFFECTIVE PAGES (CONT)

CHAPTER	PAGE	DATE	CODE
38-3-0	1	Nov. 3/61	AB-1
38-3-0	2	Nov. 3/61	AB-1
38-3-0	3	Nov. 3/61	AB-1
38-3-0	4	Nov. 3/61	AB-1
38-3-0	101	Nov. 3/61	AB-1
	BLANK		
38-3-1	201	Nov. 3/61	AB-1
38-3-1	202	Nov. 3/61	AB-1
38-3-2	201	Nov. 3/61	AB-1
38-3-2	202	Nov. 3/61	AB-1
38-3-3	201	Nov. 3/61	AB-1
38-3-3	202	Nov. 3/61	AB-1

Chapter 38
WATER/WASTE

TABLE OF CONTENTS

CHAPTER SECTION	SUBJECT	PAGE
38-0	PASSENGER WATER AND WASTE SYSTEMS	
	General	1
38-1-0	PASSENGER WATER SYSTEM	
	General	1
	Operation	1
	Water System Components	4
	Service Panels	5
	Water Pressurization System	5
	Water Pressurization System Components	8
	Water Heater Circuit	9
	Water Heater Circuit Components	9
	Lavatory Wash Basin	11
	Passenger Water System - Trouble Shooting	101
	Unit Servicing Water System Disinfection Procedure	201
	Adjustment/Test Water System Leak Test	204
	Adjustment/Test Passenger Water System Pressurization Test	204
38-1-1	WATER TANK	
	Removal/Installation Water Tank	201
	Approved Repairs Water Tank	206
38-1-2	FORWARD SERVICE PANEL SYSTEM DRAIN VALVE	
	Removal/Installation System Drain Valve	201
38-1-3	SYSTEM AIR PRESSURE RELEASE VALVE	
	Removal/Installation System Air Pressure Release Valve	201
38-1-4	ELECTRIC MOTOR-DRIVEN AIR PUMP	
	Removal/Installation Main or (* Auxiliary) Electric Motor-Driven Air Pumps	201
38-1-5	PRESSURE RELIEF VALVE	
	Removal/Installation Pressure Relief Valve	201
	Adjustment/Test Pressure Relief Valve	201
38-1-6	PUMP LOW PRESSURE CONTROL AND WARNING LIGHT SWITCHES	
	Removal/Installation Pump Low Pressure Control and Warning Light Switches	201
38-1-7	WATER HEATER	
	Removal/Installation Water Heaters	201

TABLE OF CONTENTS (CONT)

CHAPTER SECTION	SUBJECT	PAGE
38-3-1	TOILET SHROUD (This section, 38-3-1, is applicable to airplanes CV35 and on.)	
	Removal/Installation Toilet Shroud.....	201
38-3-2	LAVATORY WASTE TANK (This section 38-3-2, is applicable to airplanes CV35 and on.)	
	Removal/Installation Lavatory Waste Tank.....	201
38-3-3	LAVATORY DRAIN VALVE (This section, 38-3-3, is applicable to airplanes CV35 and on.)	
	Removal/Installation Lavatory Drain Valve.....	201

PASSENGER WATER AND WASTE SYSTEMS - DESCRIPTION AND OPERATION

1. General

The water and waste systems consist of a pressurized fresh water supply system and a lavatory waste system.

The pressurized fresh water system provides potable water to the lavatory wash basins and buffets. *Drinking water and water used for food and beverage preparation passes through replaceable charcoal filters. The water system is serviced through two ground service panels; one on the lower left side of the fuselage at station 650, and one on the lower left side of the fuselage below the aft entrance door at station 1388.

The lavatory waste system provides storage in the toilet sump tanks for water drained from the lavatory wash basins. Four toilets (two forward and two aft) are provided in the main cabin area for passenger comfort. A ground service panel for the aft lavatories is located at the fuselage bottom centerline at station 1425; the forward lavatories ground service panel is located on the right side of the fuselage at station 350.

* Applicable to airplanes CV26 through CV34.

PASSENGER WATER SYSTEM - DESCRIPTION AND OPERATION

1. General

The fresh water supply system (see Figures 1 and 2) uses air pressure to force water from the supply tank to the forward and aft buffets and lavatories. The water system relies on a pressurization circuit and a water heater circuit for proper operation.

The water system consists of a fiberglass water supply tank, a ground service panel for maintenance and servicing of the system, and numerous valves and interconnecting tubing to deliver water to the proper places.

The pressurization circuit consists of two motor-driven air pumps (*main and auxiliary), two pump control relays (**one motor-driven air pump and pump control relay), a manual control switch, a low-pressure warning switch, a low-pressure pump control switch, warning light, three 5-ampere fuses and two 2-ampere circuit breakers. Power requirements are 115/200-volt, three-phase, ac for operation of the two air pump motors and 28-volt dc for control and warning use.

The water heater circuit consists of three water heaters, two control switches, three 7.5-ampere circuit breakers for the forward heaters, three 5-ampere circuit breakers for the aft heater and all interconnecting circuitry. Each heater has three heating elements. Power requirements are 115-volt, three-phase, ac.

2. Operation

The water for the system is contained under pressure in the supply tank and is routed to the lavatories and buffets on demand when the spigots are opened.

When the manual pump control switch is placed in the *MAIN or AUX (**ON) position, the pressurization circuit automatically maintains system pressure through the operation of the pump low-pressure control switch. The low-pressure warning switch monitors the pressurization circuit by illuminating the warning light if system pressure drops below 16 (±2) psig. As the system water supply is depleted, the air pressure decreases. The decreased pressure actuates the pump low-pressure control switch and energizes the air pump motor to repressurize the system.

Hot water for use in the lavatories is heated by three water heaters installed in the water supply lines. Once the heater control switches on the stewardess control panels are placed in the ON position, the water temperature is automatically maintained by a bi-metallic switch within each unit. The switch opens and closes as temperature increases and decreases.

*Applicable to airplanes CV1 through CV25
**Applicable to airplanes CV26 and ON

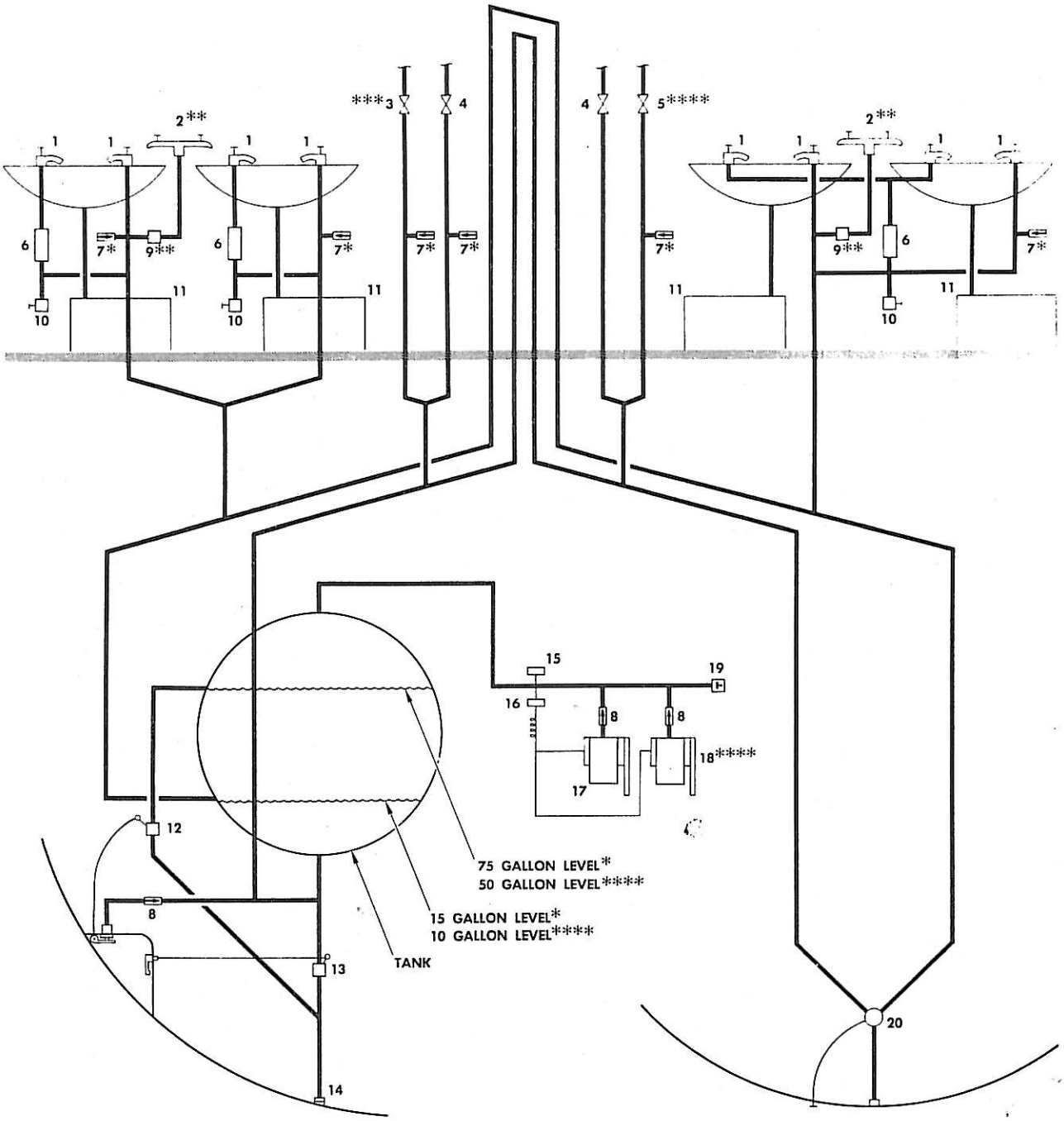

1. FAUCET
2. DRINKING WATER FAUCET**
3. CHECK VALVE, BUFFET DISCONNECT***
4. CHECK VALVE, BUFFET DISCONNECT
5. CHECK VALVE, BUFFET DISCONNECT****
6. WATER HEATER
7. CHECK VALVE*
8. CHECK VALVE
9. DRINKING WATER FILTER**
10. MANUAL DRAIN VALVE
11. SUMP TANK
12. AIR PRESSURE RELEASE VALVE
13. FWD DRAIN VALVE
14. HOSE CONNECTION
15. LOW PRESSURE WARNING LIGHT SWITCH
16. AIR PRESSURE CONTROL SWITCH
17. COMPRESSED AIR PUMP, MAIN
18. COMPRESSED AIR PUMP, AUXILIARY****
19. RELIEF VALVE
20. AFT DRAIN VALVE

EFFECTIVITY	
APPLICABLE TO AIRPLANES	
*	CV26 AND ON
**	CV26 THROUGH CV34
***	CV1 THROUGH CV25, CV35 AND ON
****	CV1 THROUGH CV25

30.30.38.001 E

Passenger Water System Schematic
Figure 1

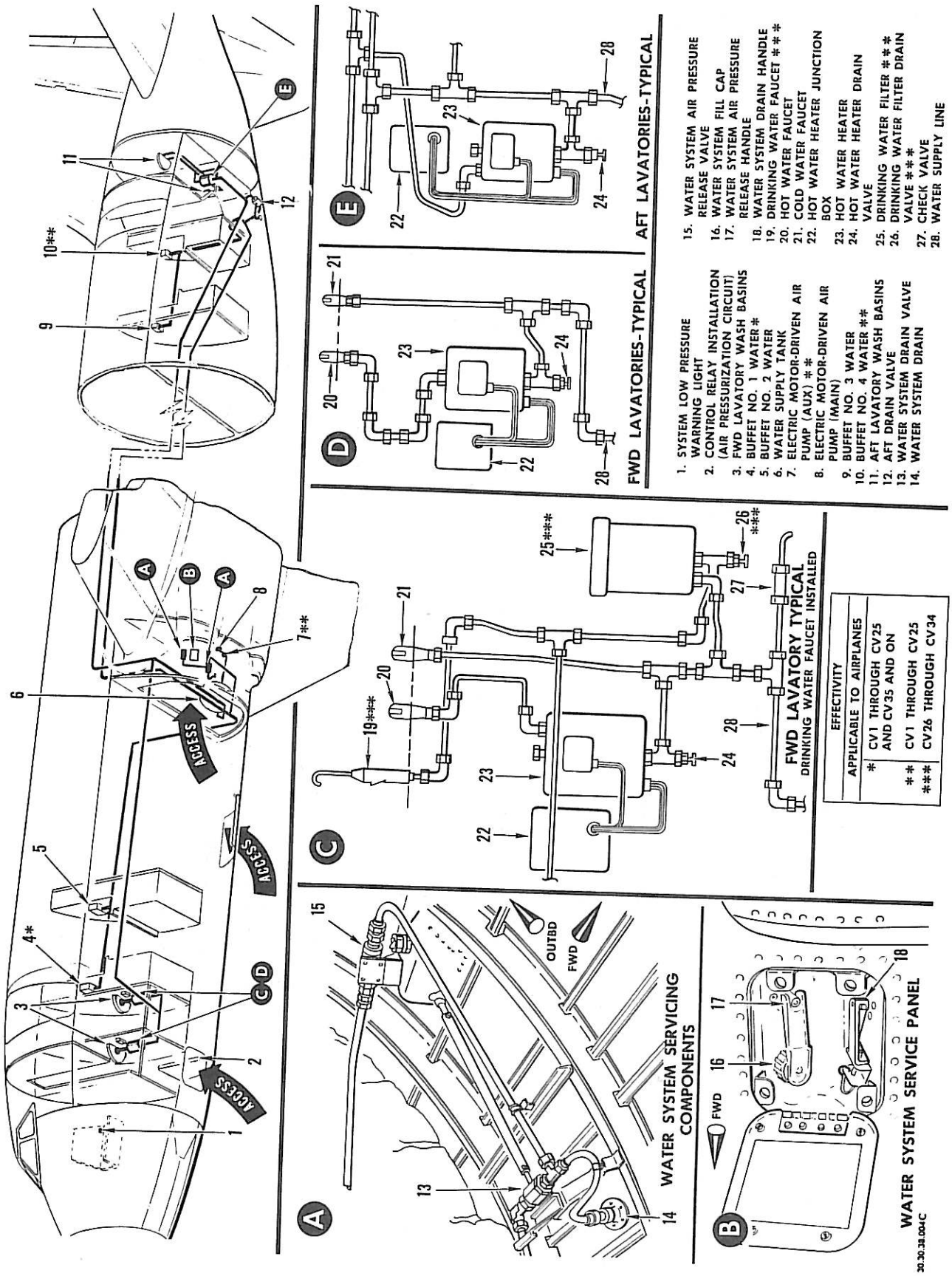

Feb. 21/63
AB-2

Passenger Water System Components
Figure 2

3. Water System Components

A. Water Supply Tank.

The fresh water supply tank is made of fiberglass. It is installed below the cabin floor just forward of the wing tie-box section, at fuselage station 640. The tank has a usable capacity of *50 US (**75 US) gallons. An access door is located near the top of the tank for inspection purposes. An integral overflow line is positioned at the *50-gallon (**75-gallon) level to prevent overfilling the tank during servicing. The filler line and tank drain line are connected to the same opening in the bottom of the tank; an integral check valve in the filler line prevents reverse water flow. A drain valve in the lower section of the tank line is remotely controlled from the water service panel through a universal-jointed shaft and lever.

Water for the lavatories is limited to *40 (**60) gallons by a standpipe in the supply tank. This assures an adequate supply of drinking water, since the buffet supply line is connected at the bottom of the tank and can receive the remaining *10 (**15) gallons. The supply line for the lavatories is connected to the supply standpipe.

The supply tank is accessible through a zippered opening in the aft partition of the forward cargo compartment. Instructions for servicing the supply tank and water system are printed on the water filler access door, at fuselage station 650.

B. Tubing.

The water system tubing is manufactured from both polyethelene plastic and copper. The plastic tubing is white in color for easy identification. Fittings used with the water system tubing are both zytle plastic (swagelock-type) and brass. Inserts are included throughout the system at connections to eliminate pressure pulsations from the compressed air pump.

The system tubing routes water from the filler connections to the supply tank and from the tank to the lavatory and buffet connection points as well as the system drain points. All water system lines are routed along the right side of the fuselage below the cabin floor until they reach the buffet and lavatory areas. The tubing varies in size from 0.25-inch outside diameter (OD) with 0.002-inch wall thickness to 0.75-inch OD with a 0.06-inch wall thickness. The size of the tubing depends on the service for which it is utilized.

*Applicable to airplanes CV1 through CV25.
**Applicable to airplanes CV26 and on.

C. System Drain Valve.

The system drain valve (see Figure 2) is located in the water tank drain line. The valve is manually operated, through a universal-jointed shaft, by a control handle on the water system service panel. When the control handle is moved 90 degrees from the closed position, the mechanical linkage rotates a ported ball within the valve to align the port with the drain tubing.

D. Pressure Release Valve.

The pressure release valve (manual remote control valve), shown on Figure 2, maintains air pressure in the water system in the closed position, and releases pressure through the overflow and vent tubing in the open position.

E. Water Heater Drain Valve.

The water heater drain valve, shown on Figure 2, is a needle-type drain cock. The drain valve is opened and closed by turning a winged fitting on the bottom of the valve.

4. Service Panels

The forward passenger water system service panel is located on the lower left exterior of the fuselage at station 650. The panel has a replenishing filler connection and two controls to remotely operate the supply tank pressure release valve and the drain valve (see Figure 2). This service panel is enclosed by a hinged access door which is retained in the closed position by four Camloc fasteners; the access door is aerodynamically contoured to the outside skin surface. A placard fastened to the inside of the access door contains filling and draining instructions for the fresh water system; the pressure in the water system must always be released prior to filling or draining.

A second service area is located just below the aft entrance door at fuselage station 1388. This service area includes a drain valve and drain plug. Water from the aft buffets and the two aft lavatory wash basin spigots is drained at this point. The drain valve control handle is faired into the fuselage. A drain line plug is located approximately eight inches aft of the drain handle. After removing the drain plug, water is drained by pulling out and rotating the drain valve handle forward.

5. Water Pressurization System

A. General.

The pressurization circuit (see Figure 3) consists of two motor-driven air pumps (*normal and auxiliary) (**one motor-driven air pump), a

*Applicable to airplanes CV1 through CV25
**Applicable to airplanes CV26 and ON

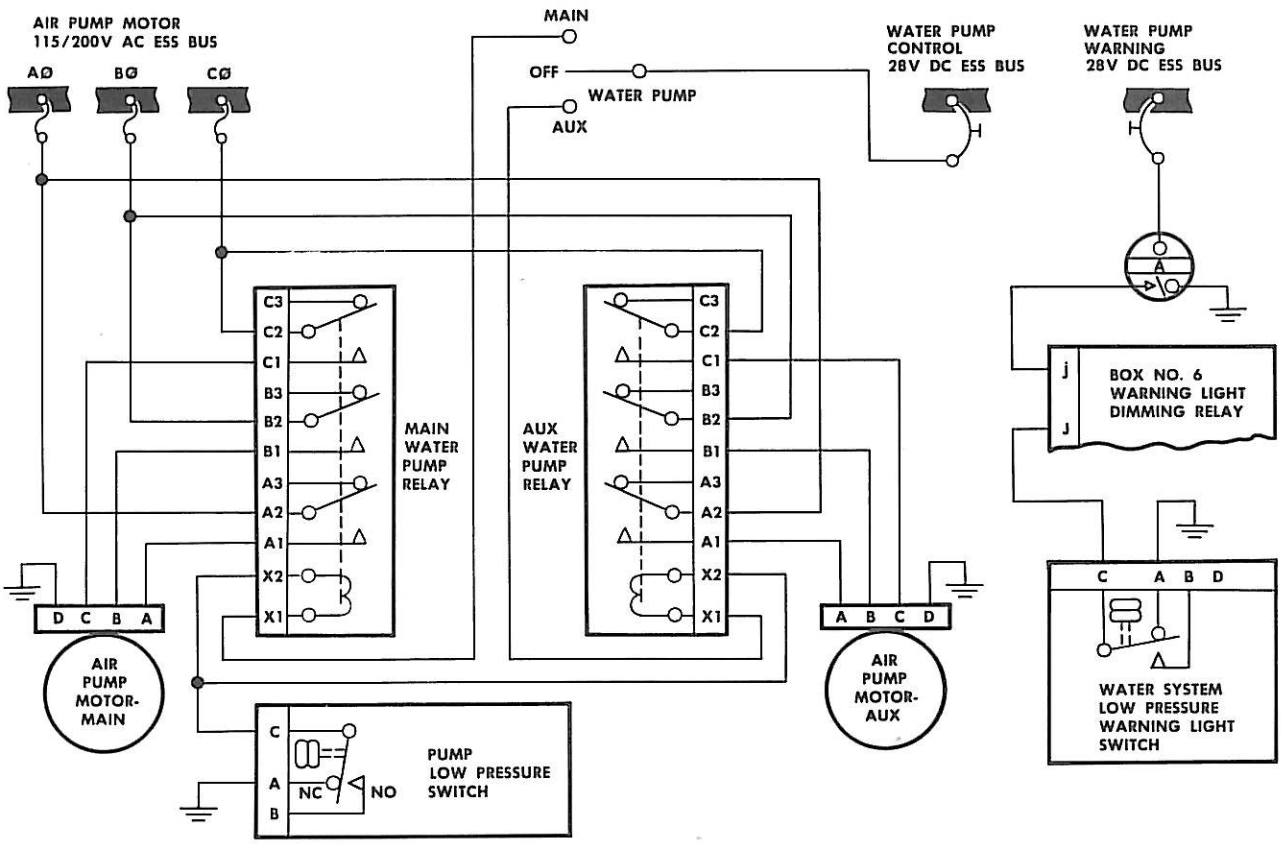

* WATER PRESSURIZATION CIRCUIT SCHEMATIC

NOTE:
REFER TO WIRING DIAGRAM MANUAL FOR FUSE AND CIRCUIT BREAKER AMPERAGES

EFFECTIVITY	
APPLICABLE TO AIRPLANES	
*	CV 1 THROUGH CV 25
* *	CV 26 AND ON

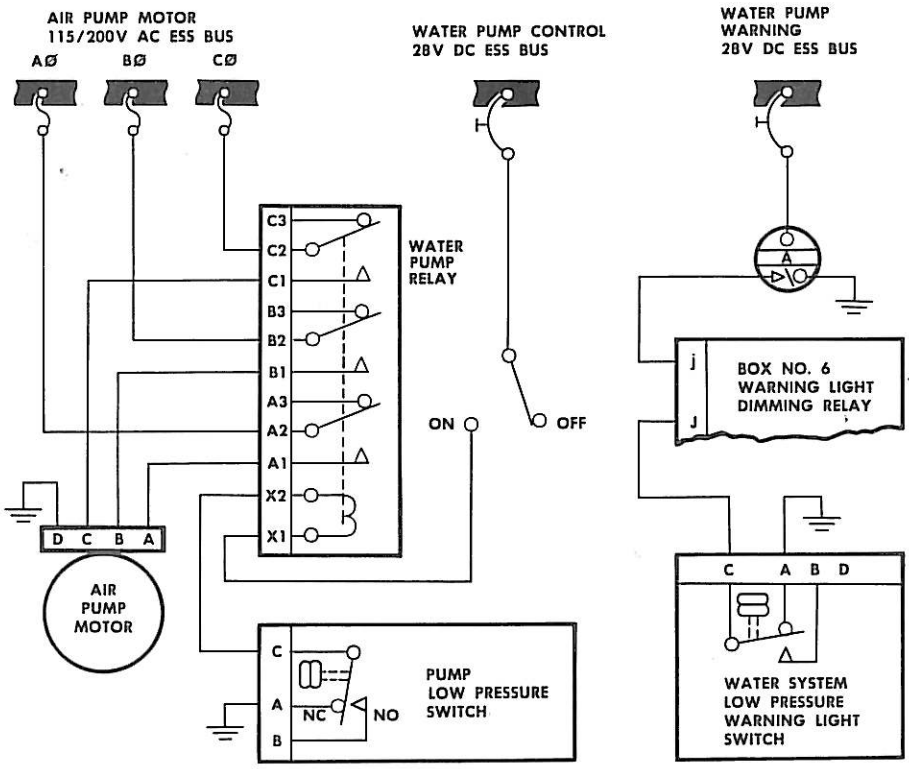

* * WATER PRESSURIZATION CIRCUIT SCHEMATIC

30.30.38.005B

pump low-pressure control switch, a low-pressure warning light switch, a warning light, and *two (**one) pump control relay(s). A *MAIN-AUX (**ON-OFF) pump control switch on the flight engineer's panel arms the circuit for operation. The pressure required to force water from the supply tank to the buffets and to the lavatories is supplied by the **normal (*normal or auxiliary) electric motor-driven air pump(s). Power for pump operation is received from the 115/200-volt, three-phase No 2 essential bus through three fuses labeled WATER PUMP MOTOR. The fuses are located in the ac power distribution box under the flight engineer's panel. Power for operating the pump control relay(s) and warning light is received from the 28-volt, dc essential bus through two circuit breakers labeled WATER PUMP CONT and WATER PUMP WARN. The low-pressure warning light and the pump control switch are mounted on the flight engineer's control panel.

B. Operation.

Normal operation of the passenger water pressurization system is initiated by placing the pump control switch in the *MAIN (**ON) position, after which system operation is automatic; see Figure 3. Power is routed through the pump control switch to one side of the actuating coil of the pump control relay. The ground lead of the coil is connected to the common contact of the pump low-pressure control switch; the pump low-pressure control switch provides the ground for relay actuation. When the relay is energized, three-phase ac from the essential bus is routed through the relay switching contacts to the pump, for motor operation. When a pressure of 42 (±2.0) psig exists in the system, the diaphragm-actuated contacts in the pump low-pressure control switch will open and the pump control relay will deenergize, interrupting power to the motor. When the system pressure decreases to 32 (±2) psig, the pressure switch closes and energizes the pump control relay and the pumping operation resumes. If a malfunction in the system allows the air pressure to fall to 16 psig or below, the low-pressure warning light switch contacts will close and establish the circuit ground, thereby illuminating the warning light. The warning light extinguishes when pressure again rises to 25 (±2.0) psig, or higher. Check valves in the pressure lines from the air pumps prevent motorizing the pumps. A pressure relief valve in the pressure supply line from the air pump(s) protects the system from over-pressure. The relief valve is set to relieve system pressure in excess of 49 (±1) psig.

*When the pump control switch is in the AUX position, the auxiliary pump operates; auxiliary pump operation is identical to that of the main pump.

*Applicable to airplanes CV1 through CV25.
**Applicable to airplanes CV26 and on.

6. Water Pressurization System Components

A. Electric Motor-Driven Air Pump.

The air pump motor assemblies (*assembly) are installed inboard of the water tank and are accessible through a zippered opening in the aft partition of the forward cargo compartment. Each pump is controlled through the combined functions of the control switch, the low-pressure control switch and the associated pump control relay. Each air pump motor receives three-phase, 115/200-volt, ac power from the No. 2 essential bus.

B. Pump Control Relay.

The pump control relay serves as an ac power switch to open or close the power circuit for the air pump motor assembly. The relay actuating coil operates on 28-volt dc and is controlled by the pump low-pressure control switch. When the pump control relay is energized, ac is routed directly to the windings of the associated pump motor. The relays are mounted in the electrical compartment at fuselage station 306.

C. Pump Low-Pressure Control Switch.

The low-pressure control switch(es) for the air pump motor(s) consists of a pressure diaphragm and a set of electrical contacts. The switch contacts are set to open with a pressure of 42 (±2.0) psig, the contacts close when the pressure drops to 32 (±2) psig. The switch is connected in the air pump pressure line, and controls the ground circuit to the armed pump control relay. Closing the switch electrical contacts energizes the armed pump control relay, routing three-phase ac to the windings of the corresponding air pump motor.

D. Low-Pressure Warning Switch and Light.

The warning light pressure switch consists of a diaphragm and a set of electrical contacts. The switch is adjusted so that a pressure of 25 (±2.0) psig or higher holds the electrical contacts open and the warning light remains extinguished. When system pressure is reduced to 16 (±2.0) psig or below, the switch contacts close the circuit to ground, thereby illuminating the warning light.

E. Pressure Relief Valve.

The pressure relief valve, shown on Figure 2, is a spring-loaded, free-flow check valve. The pressure port of the relief valve is connected to the pressure line of the electric motor-driven air pump. The pressure relief port is vented to ambient air. The valve is set to relieve system air pressure in excess of 49 (±1.0) psig. Maximum permissible leakage of the valve is one cubic inch per minute.

*Applicable to airplanes CV26 and on.

7. Water Heater Circuit

A. General.

The water heater circuit (see Figure 4) consists of three water heaters, two junction boxes, two control switches and six circuit breakers. The heater circuit heats water for use in the lavatories. Power requirements for the forward heater circuit are 115-volt, three-phase, ac obtained from the No. 1 nonessential bus, and 115-volt, three phase ac from the No. 4 nonessential bus for the aft heater circuit. Each heater has three heating elements and each element connects to a different phase. Should one of the heater elements malfunction, the remaining two elements will continue to operate.

B. Operation.

Water heater operation is initiated by placing the water heater control switches, located on the forward and aft stewardess control panels, in the ON position. This switching action completes the C-phase portion of the power circuit through the contacts of the control switch to the coil of the control relay, via the thermoswitch. When the relay coil is energized, the relay contacts close and route power to the heating elements. When the water temperature reaches 128 degrees F (53 degrees C), the thermoswitch opens and cuts off power to the relay coil, thereby interrupting power to the heating elements. The thermoswitch is protected by a fusible overheat switch between the three heating elements and the relay contacts.

8. Water Heater Circuit Components

A. Water Heater.

The water heater is a cylindrical-shaped unit incorporating an inlet and outlet fitting for water line connections, three integral heating elements, a thermoswitch and a fusible overheat switch. All components of the heater are removable from outside the unit. The heater tank has a water capacity of two quarts. A water temperature of approximately 128 degrees F (53 degrees C) is normally maintained by the thermoswitch. Temperature of the water in the heater tank may be regulated by turning the adjusting screw on the thermoswitch in the desired direction as indicated by the arrow on the thermoswitch. Each full turn of the adjusting screw changes the water temperature 100 degrees F (55 degrees C) (refer to Removal/Installation Water Heaters). An overheat switch with a fusible element is mounted on the side of the water heater and connected in the circuit between the heating elements and control relay contacts. The overheat switch serves as a safety device in the event of thermoswitch failure. Should the thermoswitch fail, the fusible element in the overheat switch will melt when the water temperature reaches approximately 175 degrees F (79 degrees C), causing the three switches controlling current flow to the heating elements to open, thereby preventing overheat damage to the water heater.

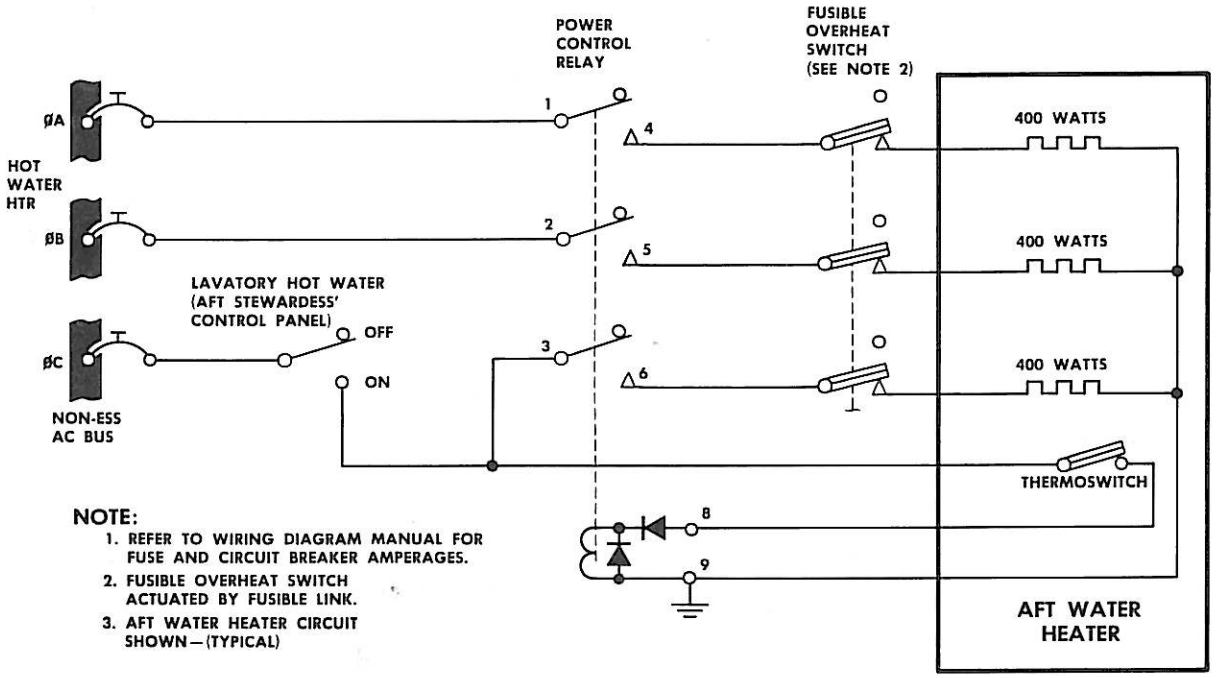
POWER CONTROL RELAY
FUSIBLE OVERHEAT SWITCH (SEE NOTE 2)
ØA
HOT WATER HTR
ØB
ØC
NON-ESS AC BUS
LAVATORY HOT WATER (AFT STEWARDESS' CONTROL PANEL)
OFF
ON
1
2
3
4
5
6
8
9
400 WATTS
400 WATTS
400 WATTS
THERMOSWITCH
AFT WATER HEATER
NOTE:
1. REFER TO WIRING DIAGRAM MANUAL FOR FUSE AND CIRCUIT BREAKER AMPERAGES.
2. FUSIBLE OVERHEAT SWITCH ACTUATED BY FUSIBLE LINK.
3. AFT WATER HEATER CIRCUIT SHOWN—(TYPICAL)

22.02.38.060

B. Junction Box.

The junction box is located adjacent to the water heater and houses the power control relay for either connecting or disconnecting power to the heating elements. The power source used to energize the relay coil is connected in series with the control switch and the thermo-switch in the heater. When either of these switches is open, the relay contacts are open. A removable cover on the junction box permits access to the wiring connections.

9. Lavatory Wash Basin

The lavatory wash basin (see Figure 2) is bonded to the top of the lavatory counter. The basins are stainless material and have a drain plug which is spring-loaded to the closed position to eliminate vibration. A single spigot with separate handles for hot and cold water is mounted on the basin. *A drinking water spigot is also provided.

*Applicable to airplanes CV26 through CV34.

PASSENGER WATER SYSTEM - TROUBLE SHOOTING

POSSIBLE CAUSE	ISOLATION PROCEDURE AND CORRECTION
1. WATER DOES NOT FLOW WHEN LAVATORY SPIGOTS ARE OPEN AND PRESSURIZATION CIRCUIT ACTIVATED	
A. Water in supply tank below standpipe level.	Hold finger under open spigot; if air pressure can be felt, refill water supply tank. If no pressure felt, proceed to step 2.
2. WATER DOES NOT FLOW WHEN LAVATORY AND BUFFET SPIGOTS ARE OPEN AND PRESSURIZATION CIRCUIT ACTIVATED	
A. Water supply tank empty.	Service water supply tank and check for visible signs of leakage.
B. Leak in air pressure line.	Apply bubble fluid to lines and fittings between air pumps and water supply tank. Tighten fittings as necessary or replace lines and fittings. NOTE: Tighten plastic fittings finger tight, then tighten three quarters turn maximum with a wrench.
C. Leak in water supply tank.	Apply bubble fluid to tank. If leaks are found, repair or replace tank.
D. Main air pump malfunctioning.	Actuate PUMP CONTROL switch, located on the flight engineer's control panel, to the *MAIN (**ON) position. Check main pump for operation. If pump is operating, disconnect pressure line from pump and check for air flow. If no air pressure, replace main pump.
E. *Auxiliary air pump malfunctioning.	Actuate PUMP CONTROL switch, located on the flight engineer's control panel, to AUX position. Check auxiliary pump for operation. If pump is operating, disconnect pressure line from pump and check for air flow. If no air flow, replace faulty pump. If either pump fails to operate when the pressurization circuit is activated, refer to step 3.

*Applicable to airplanes CV1 through CV25
**Applicable to airplanes CV26 and ON

POSSIBLE CAUSE	ISOLATION PROCEDURE AND CORRECTION

3. WATER PUMPS DO NOT OPERATE WHEN WATER PUMP CONTROL CIRCUIT BREAKER IS CLOSED AND PUMP CONTROL SWITCH IS ACTUATED TO EITHER THE *MAIN OR AUX (**ON) POSITION

A. Faulty control circuit.

NOTE: Depressurize passenger water system prior to trouble shooting pressurization circuit.

Close WATER PUMP CONT circuit breaker on main circuit breaker panel and check for power. If no power, replace faulty circuit breaker. If power, open circuit breaker and check for continuity to PUMP CONTROL switch, terminal 2. If no continuity, correct circuit.

If continuity to switch, place switch in *MAIN (**ON) position and check for continuity between switch terminals 2 and 3. If no continuity, replace faulty PUMP CONTROL switch.

*If continuity between terminals 2 and 3, place PUMP CONTROL switch in AUX position. Check for continuity between switch terminals 1 and 3. If no continuity, replace faulty PUMP CONTROL switch.

WARNING: ENSURE THAT THREE WATER PUMP MOTOR LIMITERS ARE NOT INSTALLED.

Check continuity from PUMP CONTROL switch terminal 3 to main water pump relay, terminal X1. (*Check also for continuity from PUMP CONTROL switch terminal 1 to auxiliary water pump relay, terminal X1.) If no continuity, correct circuits. Close WATER PUMP CONT circuit breaker and actuate PUMP CONTROL switch to *MAIN (**ON) position. Check for continuity between main water pump relay pins A1 and A2. Note if there is continuity.

*Actuate PUMP CONTROL switch to AUX position. Check for continuity between auxiliary pump relay pins A1 and A2. Note if there is continuity. Return

*Applicable to airplanes CV1 through CV25
**Applicable to airplanes CV26 and on

POSSIBLE CAUSE	ISOLATION PROCEDURE AND CORRECTION
3. WATER PUMPS DO NOT OPERATE WHEN WATER PUMP CONTROL CIRCUIT BREAKER IS CLOSED AND PUMP CONTROL SWITCH IS ACTUATED TO EITHER THE *MAIN OR AUX (**ON) POSITION (CONT)	
	PUMP CONTROL switch to OFF position and open WATER PUMP CONT circuit breaker.
	Check continuity from pump control relay(s) pins X2 to pump low pressure switch plug P194, pin C. If no continuity, correct circuit. Check for continuity between pump low pressure switch pins C and A. If no continuity, replace faulty switch. If continuity, check continuity from plug P194, pin A to ground. If no continuity, correct circuit.
	If continuity between pump control relays and pump low pressure switch, through switch and from switch to ground, replace pump control relay that did not have continuity.
B. Faulty power circuit.	Check for power through three WATER PUMP MOTOR limiters. If no power, replace faulty limiters.
	If power through limiters, remove limiters and check for continuity to water pump relay(s). If no continuity, correct circuits.
	Apply 28-volt dc power to main water pump control relay, pins X1 and X2. Check for continuity between relay pins A1 and A2, B1 and B2, and C1 and C2. If no continuity, replace faulty pump control relay.
	*Apply 28-volt dc power to auxiliary water pump control relay, pins X1 and X2. Check for continuity between relay pins A1 and A2, B1 and B2, and C1 and C2. If no continuity, replace faulty pump control relay.

*Applicable to airplanes CV1 through CV25
**Applicable to airplanes CV26 and on

POSSIBLE CAUSE	ISOLATION PROCEDURE AND CORRECTION
3. WATER PUMPS DO NOT OPERATE WHEN WATER PUMP CONTROL CIRCUIT BREAKER IS CLOSED AND PUMP CONTROL SWITCH IS ACTUATED TO EITHER THE *MAIN OR AUX (**ON) POSITION (CONT)	
	Check continuity from pump control relay (*relays) to air pump motor (*motors). If no continuity, correct circuit.
	Check for proper operation of air pump motor (*motors). If motor faulty, replace air pump motor assembly.
4. LOW PRESSURE WARNING LIGHT DOES NOT ILLUMINATE WHEN SYSTEM PRESSURE IS BELOW 16 (±2.0) PSIG	
A. Faulty light bulb.	Push PRESS-TO-TEST switch; if light bulb does not illuminate, replace bulb.
B. Faulty component in low pressure warning light circuit.	Check for power through WATER PUMP WARN circuit breaker at the 28-volt dc essential bus. If there is power at the circuit breaker, an open circuit, faulty low pressure warning light switch or dimming relay is indicated. Open the circuit breaker and perform a continuity check from the circuit breaker through the dimming relay, to the low pressure warning light switch. If no power is at switch, correct fault in the circuit; if power is at switch, replace the switch.
5. LOW PRESSURE WARNING LIGHT FAILS TO EXTINGUISH (SYSTEM PRESSURE ABOVE 25 (±2.0) PSIG)	
A. Low pressure warning light switch defective.	Check for continuity between pins A and C of low pressure warning light switch. If continuity present, switch contacts sticking or switch diaphragm defective; replace switch.
6. HOT WATER NOT AVAILABLE AT LAVATORY	
A. No power at terminals of heating element.	Ascertain power available at the No. 1 and No. 4 nonessential ac buses. Check for power through the water heater circuit breakers.

*Applicable to airplanes CV1 through CV25.
**Applicable to airplanes CV26 and on.

POSSIBLE CAUSE	ISOLATION PROCEDURE AND CORRECTION
6. HOT WATER NOT AVAILABLE AT LAVATORY (CONT)	
	Check for power at the water heater control switch. If no power at this point, open circuit breakers and perform a continuity check between circuit breaker panel and switch; if continuity is not complete, correct fault in circuit; if continuity is complete, replace control switch. If there was power at the control switch, continue checking the circuit in the same manner, from the control switch to the junction box, and from the junction box through the fusible overheat switch to the heating elements (see step C. if no power through the overheat switch). Correct fault in circuit or replace faulty junction box.
B. Faulty thermoswitch.	Check continuity through thermoswitch with heater water temperature below 123 degrees F (50 degrees C). If no continuity, check adjustment of thermoswitch (refer to Removal/Installation Water Heaters). Replace thermoswitch if adjustment does not correct condition.
C. Melted fusible element in overheat switch.	Check continuity through overheat switch. If no continuity, replace fusible element. NOTE: Determine cause of melted fusible element.
7. WATER HEATS TO EXCESSIVE TEMPERATURES	
A. Thermoswitch adjustment set too high.	Check temperature of water and adjust thermoswitch to regulate water temperature to 128(±5) degrees F (53±3) degrees C). Refer to Removal/Installtion Water Heaters.
B. Faulty thermoswitch.	If thermoswitch can not be adjusted to regulate water temperature to 128 (±5) degrees F (53 (±3) degrees C), replace thermoswitch.

8. WATER TEMPERATURE RISES TOO SLOWLY

A. One or more heating elements inoperative.	Actuate heater switch to ON position and determine which elements are not heating. Replace faulty elements.

POSSIBLE CAUSE	ISOLATION PROCEDURE AND CORRECTION
6. HOT WATER NOT AVAILABLE AT LAVATORY (CONT)	
	Check for power at the water heater control switch. If no power at this point, open circuit breakers and perform a continuity check between circuit breaker panel and switch; if continuity is not complete, correct fault in circuit; if continuity is complete, replace control switch. If there was power at the control switch, continue checking the circuit in the same manner, from the control switch to the junction box, and from the junction box to the heater; correct fault in circuit or replace faulty junction box.
B. Faulty 145 degree F thermoswitch.	Replace thermoswitch.
7. WATER HEATS TO EXCESSIVE TEMPERATURES	
A. Faulty thermoswitch.	If water temperature exceeds 145 degrees F (63 degrees C), a faulty thermoswitch is indicated. Replace faulty thermoswitch.
8. WATER TEMPERATURE RISES TOO SLOWLY	
A. One or more heating elements inoperative.	Actuate heater switch to ON position and determine which elements are not heating. Replace faulty elements.

WATER SYSTEM - MAINTENANCE PRACTICES

1. Unit Servicing Water System Disinfection Procedure

A. Equipment Required.

(1) Means to supply "city water" to the airplane's potable water system.

(2) Liquid Sodium Hypochlorite (five or ten percent of chlorine compound).

(3) External power unit capable of supplying 115/208 volts ac power.

(4) Syringe with capacity of 1 1/4 cup liquid.

B. Preparation.

(1) Connect external power unit (refer to Chapter 24, ELECTRICAL POWER).

(2) Close the WATER PUMP CONT and WATER PUMP WARN circuit breakers located on the main circuit breaker panel.

(3) Install three WATER PUMP MOTOR limiters (AC Power Distribution Box).

C. Procedure.

(1) Connect source of "city water" to airplane's potable water system connection.

(2) Fill water tank (refer to Chapter 12, SERVICING, for procedure).

(3) Place WATER PUMP switch (flight engineer's panel) in *MAIN (**ON) position.

NOTE: If pressure in water tank is below 32 (±2) psig, the air pump motor will start.

(4) Open all lavatory and buffet spigots and drain one gallon of water (minimum) from each spigot.

(5) Place WATER PUMP switch in OFF position and drain water system per instructions placarded on water system service panel.

(6) Using syringe, introduce chlorine compound into water system through "T" fitting of overflow and air pressure line.

*Applicable to airplanes CV1 through CV25.
**Applicable to airplanes CV26 and ON.

NOTE: If a 5 percent solution of Sodium Hypochlorite is to be used, introduce one cup for a 50 US gallon tank, or 1 1/4 cup for a 75 US gallon tank. If a 10 percent solution is to be used, introduce 1/2 cup for a 50 US gallon tank or 3/5 cup for a 75 US gallon tank.

CAUTION: DO NOT ATTEMPT TO INTRODUCE SODIUM HYPOCHLORITE SOLUTION TO TANK THROUGH TANK ACCESS DOOR. OPENING OF TANK ACCESS DOOR MAY DISTURB TANK SEAL.

(7) Immediately after introducing chlorine solution, fill tank with *50 (**75) gallons of "city water."

(8) Place WATER PUMP switch in *MAIN (**ON) position.

(9) Open all lavatory and buffet spigots. When water appears, close spigots.

(10) Place WATER PUMP switch in OFF position and release system pressure per instructions placarded on water system service door.

(11) Deleted.

NOTE: Since a certain amount of chlorinated water will have been drawn from the storage tank, it should be refilled to overflowing and chlorine solution added to obtain a 50 ppm chlorine dose in the tank. The method for determining the proper amount of chlorine solution to be added is outlined in the following steps.

(12) After chlorinated water has been pumped into system tubing, fill water tank to overflowing. Record the amount of water added.

(13) Determine amount of chlorine to be added to provide a 50 ppm solution (see Figure 201).

(14) Add chlorine compound per step C.(6).

(15) Allow chlorinated water to remain in system for a period of at least four hours.

(16) After four hour contact period, drain system.

(17) Fill water tank with potable water and place WATER PUMP switch in *MAIN (**ON) position.

(18) Flush water system by opening all spigots in lavatories and buffets.

(19) Continue running water through system until chlorine taste is not objectionable.

*Applicable to airplanes CV1 through CV25.
**Applicable to airplanes CV26 and ON.

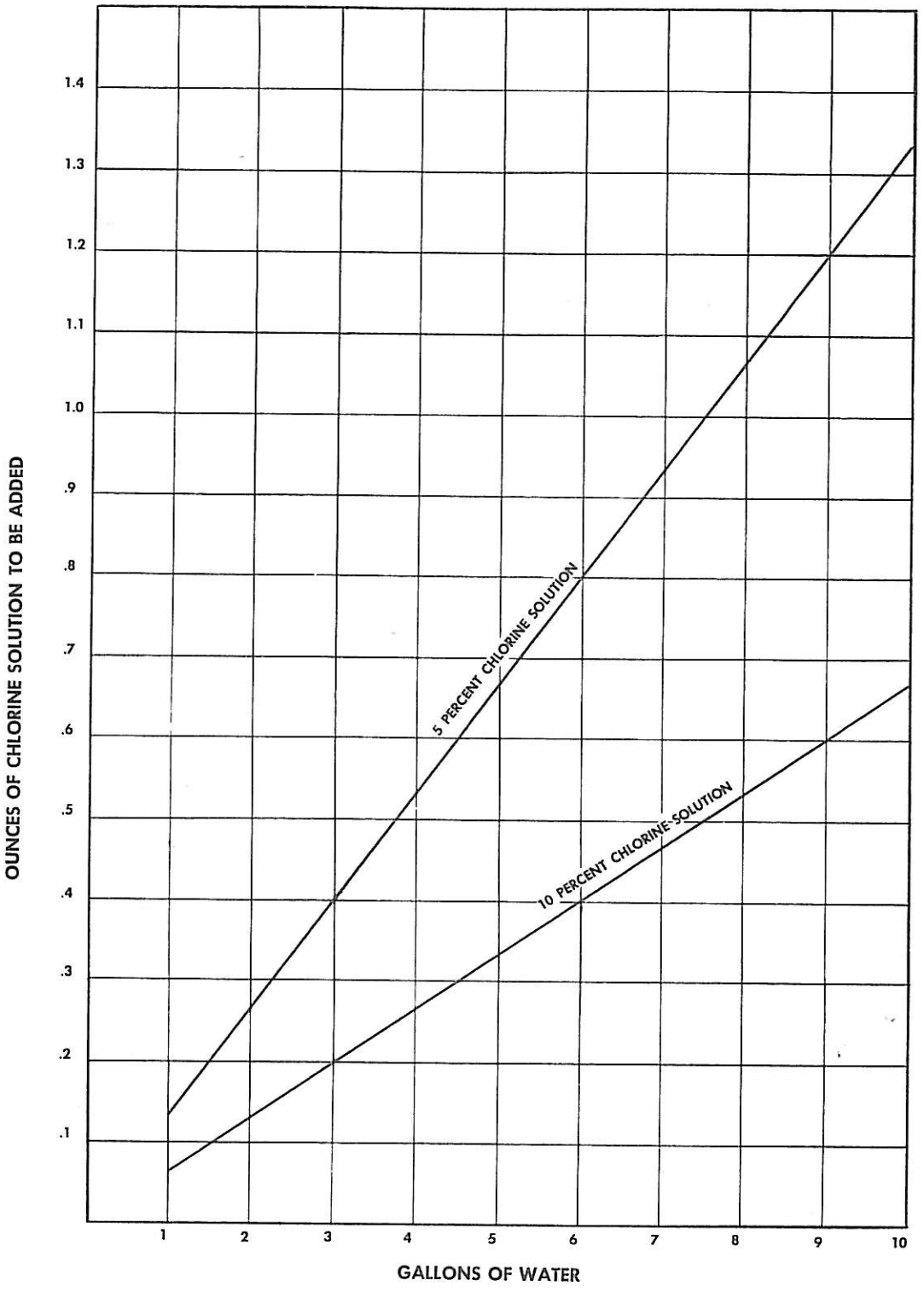
OUNCES OF CHLORINE SOLUTION TO BE ADDED
1.4
1.3
1.2
1.1
1.0
.9
.8
.7
.6
.5
.4
.3
.2
.1
5 PERCENT CHLORINE SOLUTION
10 PERCENT CHLORINE SOLUTION
1
2
3
4
5
6
7
8
9
10
GALLONS OF WATER

22.02.38.022

(20) Remove ground equipment and restore airplane to its normal configuration.

2. Adjustment/Test Water System Leak Test

A. Equipment Required.

(1) Means to supply "city water" to airplane's potable water system.

(2) Source of 115-volt, 400 cps, three-phase ac power.

B. Test Procedure.

(1) Relieve system pressure.

(2) Connect source of electrical power to airplane (refer to Chapter 24, ELECTRICAL POWER).

(3) Connect source of "city water" to airplane's water system service panel and fill system with *50 (**75) US gallons of water.

(4) Pressurize passenger water system.

(5) Open all lavatory and buffet spigots until water flows through each spigot.

(6) If air pump motor begins to pump, allow motor to stop before proceeding with test.

(7) Starting at water tank, check all water lines, fittings and spigots for visible signs of leakage. Mark all leaks for repair.

(8) Reduce system pressure to zero, drain system and repair all leaks.

(9) Repeat steps B.(3) through B.(7) until there are no leaks.

(10) When test results are satisfactory, restore airplane to normal configuration.

3. Adjustment/Test Passenger Water System Pressurization Test

A. General.

Access to the water pump is through the forward cargo compartment's aft zippered curtain.

B. Equipment Required.

(1) Source of 115-volt, 400 cps, three-phase ac power.

*Applicable to airplanes CV1 through CV25.
**Applicable to airplanes CV26 and ON.

(2) Air pressure gage with capacity of zero to 50 psig.

(3) Air vent valve.

C. Test Preparation.

(1) Install three WATER PUMP MOTOR limiters in ac power distribution box.

(2) Connect source of external power to airplane (refer to Chapter 24, ELECTRICAL POWER).

(3) Remove manually-operated drain valve, located next to air pump, and connect air pressure gage to system at this point.

(4) Disconnect air line at most accessible point between low pressure warning light switch and water tank. Connect air vent valve to line at this point.

(5) Close the WATER PUMP CONT and WATER PUMP WARN circuit breakers located on main circuit breaker panel. LOW WATER PRESSURE light on flight engineer's panel shall illuminate.

D. Test Procedure.

(1) Relieve system pressure.

(2) Place WATER PUMP switch, located on flight engineer's control panel, in the *MAIN (**ON) position. The main air pump motor shall start.

NOTE: Crack test air vent valve to prevent pressure from building too fast to allow accurate reading of the test gage.

(3) The LOW WATER PRESSURE light shall extinguish as pressure increases to 25 (±2.0) psig.

(4) The air pump motor shall stop as pressure reaches 42 (±2.0) psig.

(5) After light has extinguished and motor stopped, slowly reduce pressure by cracking the air vent valve.

(6) The pump shall start as pressure is reduced to 32 (±2.0) psig.

(7) Allow pressure to increase. Place WATER PUMP switch in OFF position before pressure reaches 42 (±2.0) psig. Pump shall stop.

(8) The LOW WATER PRESSURE light shall illuminate as pressure is reduced to 16 (±2) psig and remain illuminated as pressure is reduced to zero psig.

*Applicable to airplanes CV1 through CV25.
**Applicable to airplanes CV26 and ON.

(9) *Repeat steps (2) through (8) substituting the AUX position on the WATER PUMP switch, checking the auxiliary air pump motor.

(10) When all test results are satisfactory, remove test equipment and restore airplane to normal configuration.

*Applicable to airplanes CV1 through CV25.

WATER TANK - MAINTENANCE PRACTICES

1. Removal/Installation Water Tank (see Figures 201 and 202)

A. Equipment Required.

(1) Suitable container for draining water tank.

B. Remove Water Tank.

(1) Drain water tank (refer to Chapter 12, SERVICING, for procedure).

(2) Open curtain zipper on aft bulkhead of forward cargo compartment.

(3) Remove vertical beam forward of tank.

(4) Disconnect tubing from water tank.

(5) *Remove eight tank mounting bolts. (**Remove six quick-disconnect pins.)

(6) Remove water tank through forward cargo compartment access door.

C. Install Water Tank.

(1) *Position water tank in aft section of forward cargo compartment and install eight mounting bolts. (**Install tank with six quick-disconnect pins.)

NOTE: **If water tanks are interchanged between airplanes, it is permissible to elongate the tank aft mounting rim holes to facilitate installation. The holes may be elongated in a lateral direction (sideways) only, and to a maximum hole size of one inch. It is not permissible to elongate the side and forward mounting rim holes in any direction.

(2) Remove protective caps from end of tubing and connect tubing to water tank; tighten tubing nuts by hand until finger tight, then tighten three quarters turn with wrench.

(3) Perform leak test (refer to 38-1-0, Adjustment/Test).

(4) Sterilize system (refer to 38-1-0, Unit Servicing).

(5) Fill water tank (refer to Chapter 12, SERVICING).

(6) Install vertical beam and close curtain zipper.

*Applicable to airplanes CV1 through CV25.
**Applicable to airplanes CV26 and on.

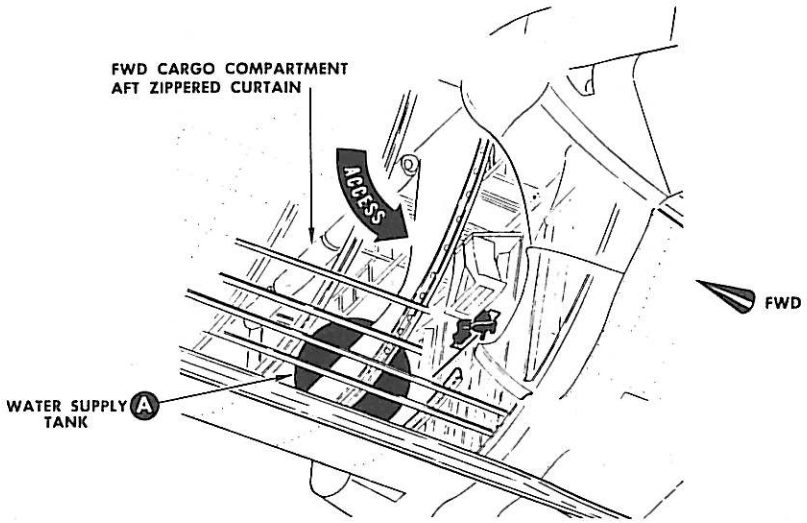

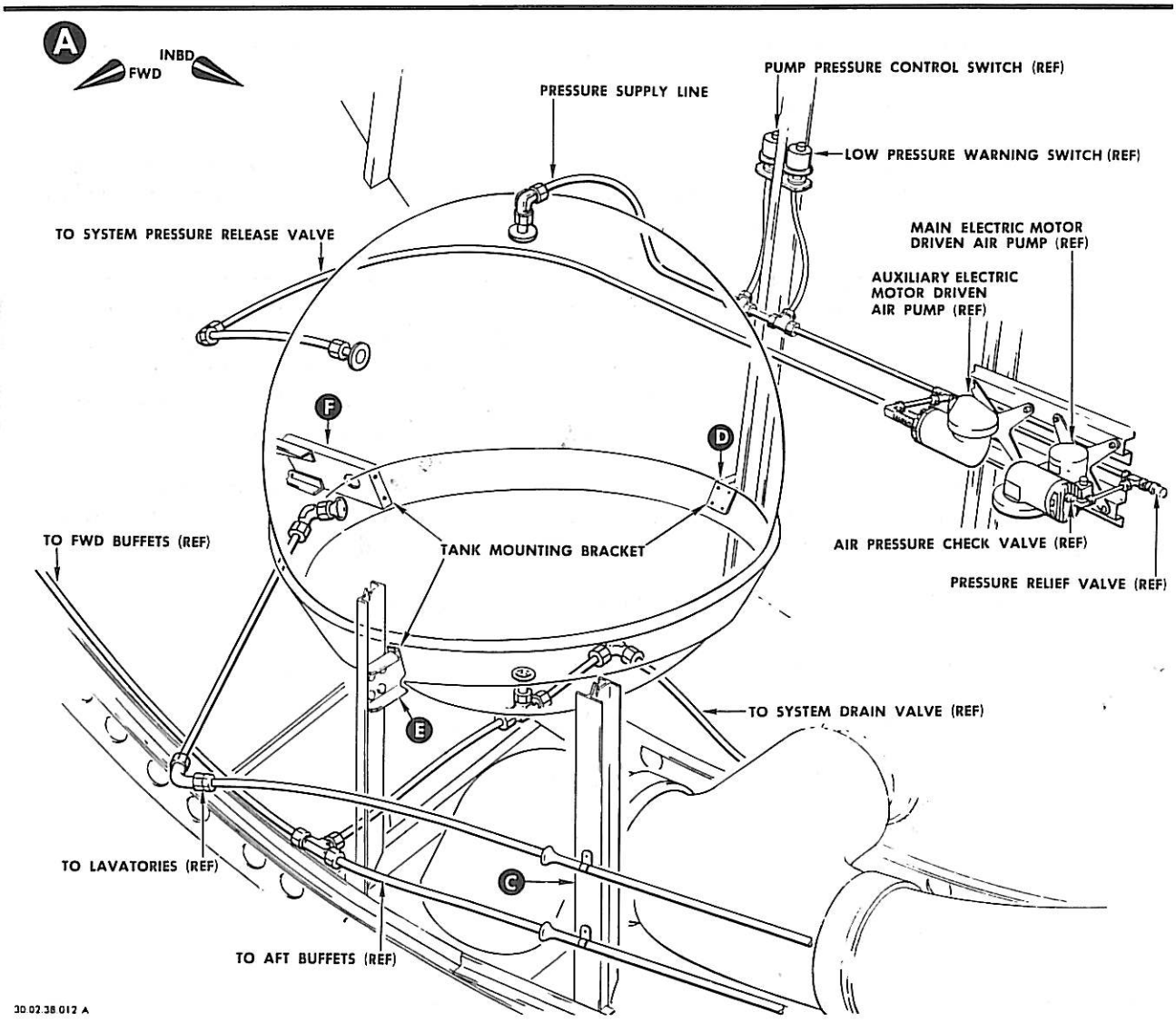

Water Supply Tank Installation-
Typical 50 US Gallon
Figure 201 (Sheet 1 of 2)

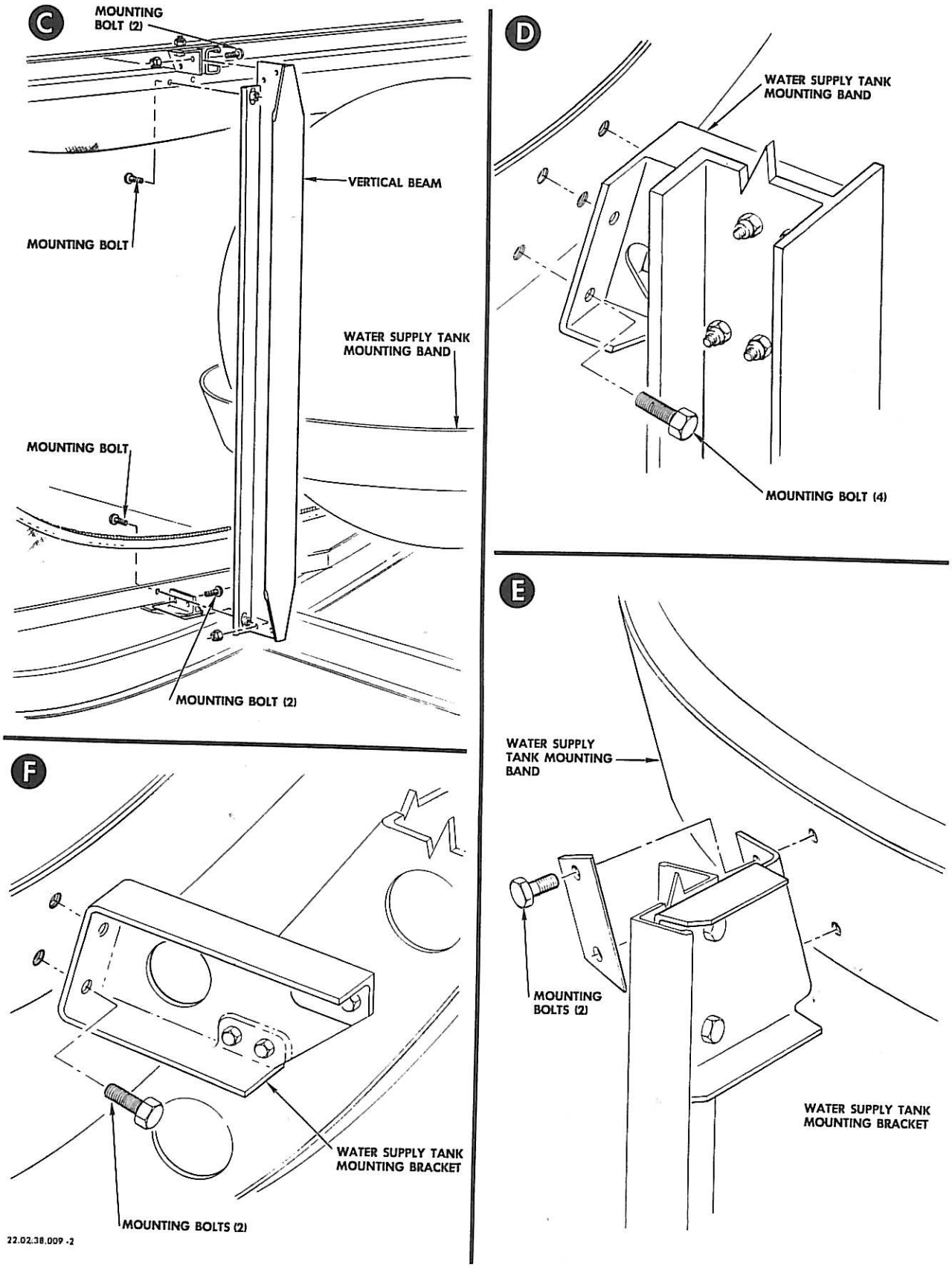

Water Supply Tank Installation -
Typical 50 US Gallon
Figure 201 (Sheet 2 of 2)

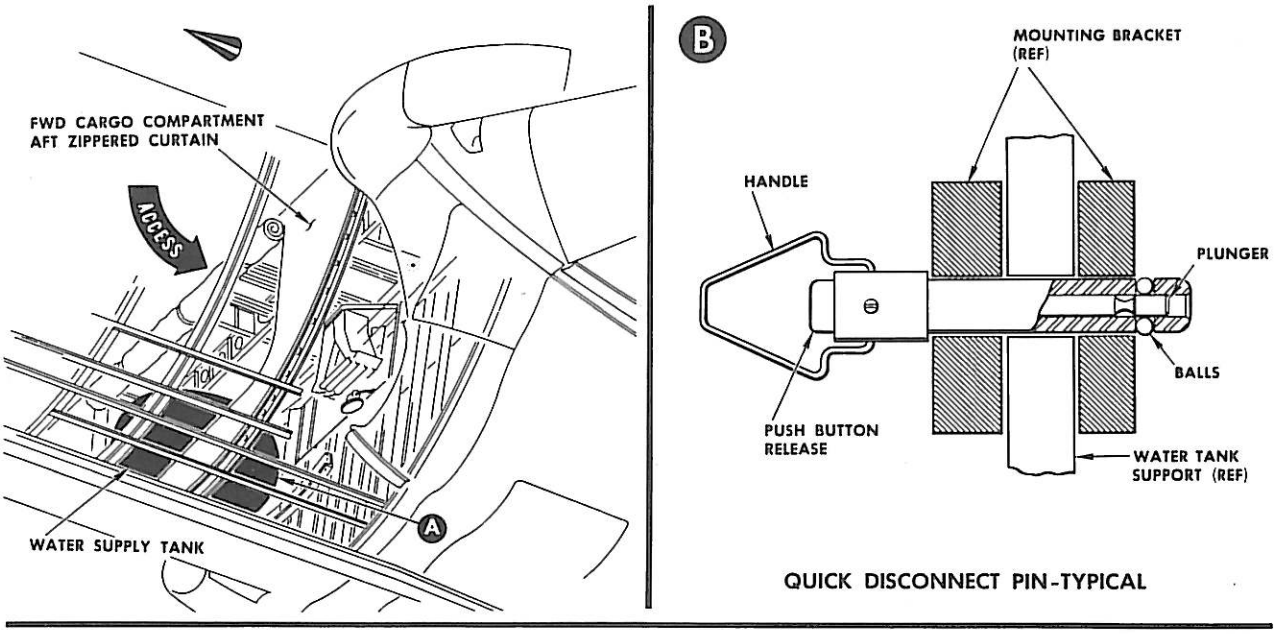

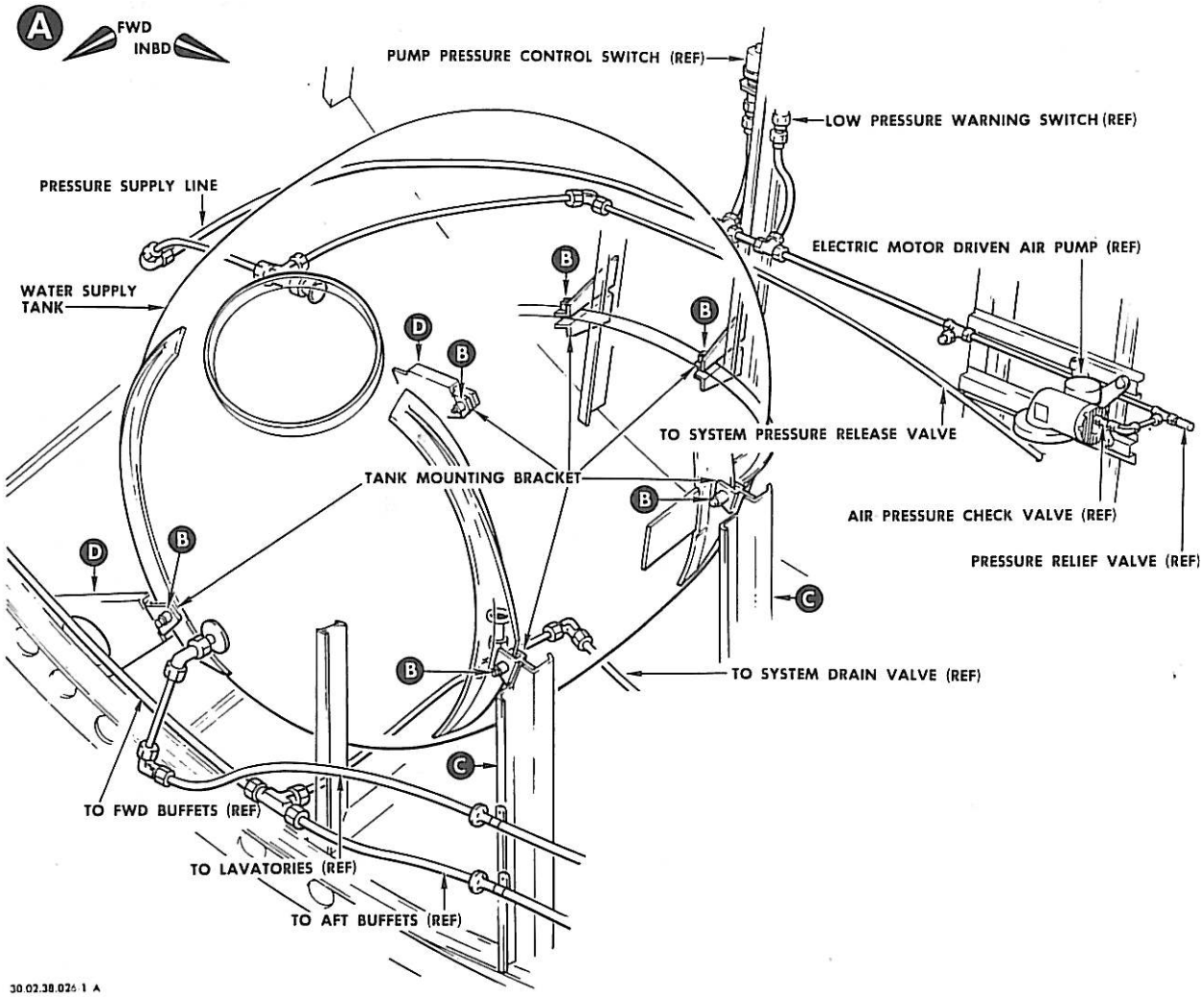

Water Supply Tank Installation -
Typical 75 US Gallon
Figure 202 (Sheet 1 of 2)

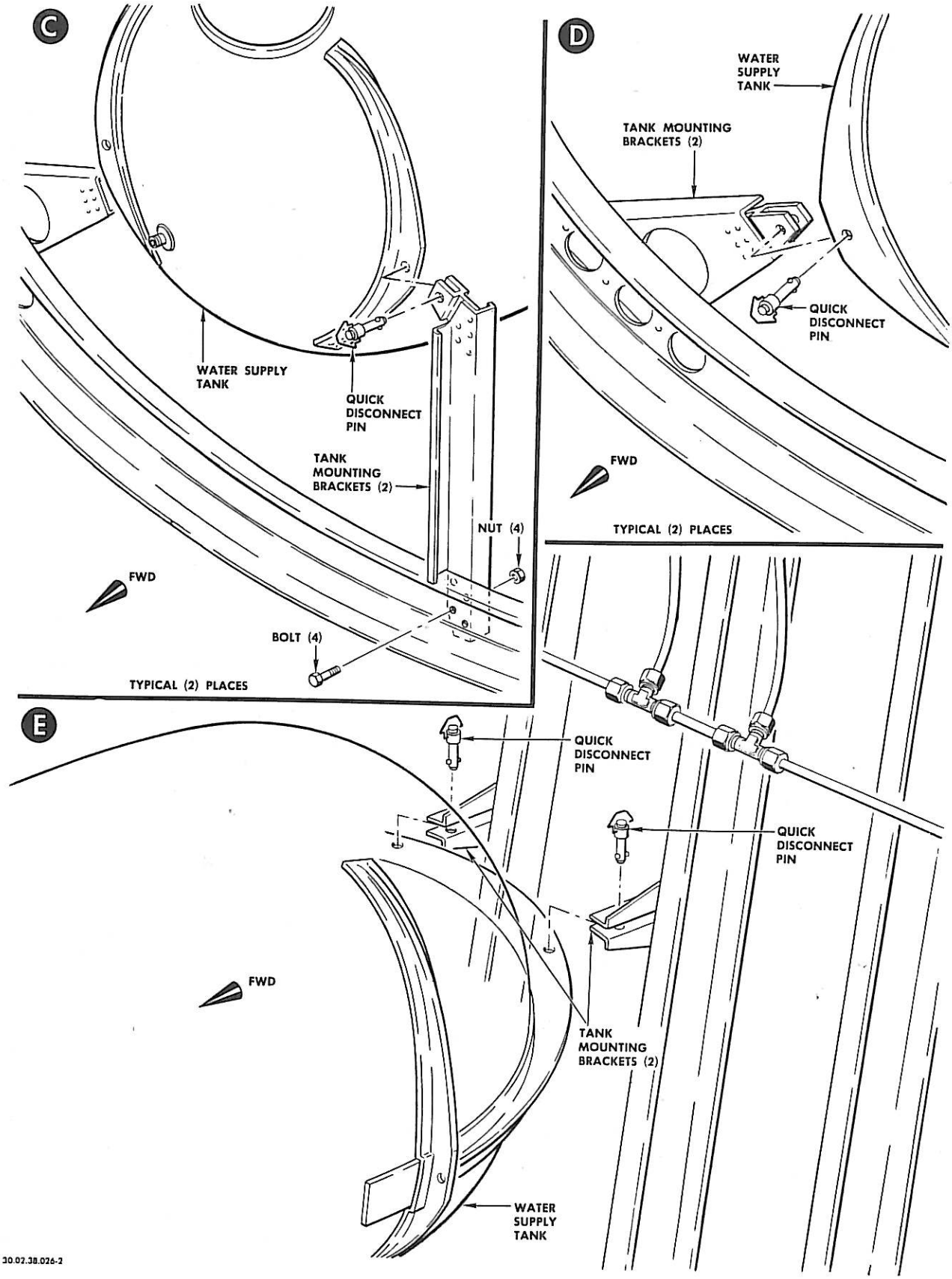

Water Supply Tank Installation -
Typical 75 US Gallon
Figure 202 (Sheet 2 of 2)

2. Approved Repairs Water Tank

A. Equipment Required.

NOTE: The sizes of the materials required to repair the water tank are dependent upon the extent of damage to the tank.

(1) Mylar film, 0.002 to 0.005 inch thick.

(2) No. 120 fiberglass cloth.

(3) No. 181 fiberglass cloth.

(4) Epon 828, manufactured by Shell Chemical Co., New York, N. Y.

(5) Versamid No. 125 catalyst, or Epon Curing Agent V-25.

(6) Source of 10 (±2) psig vacuum.

(7) Pressure-sensitive Mylar tape, or masking tape.

B. Repair Crack in Water Tank.

(1) Remove water tank (refer to Removal/Installation Water Tank).

(2) Remove access plate near top of tank to gain access to tank interior.

(3) Locate crack inside water tank, and using sandpaper roughen tank surface for an area extending approximately three inches in all directions beyond limits of crack. Remove all sanding residue and thoroughly clean inner surface of tank around repair area.

(4) Cut a piece of Mylar film nine inches wide and six inches longer than the crack to be repaired.

(5) Prepare a resin mixture (50/50 parts by weight) consisting of Epon 828 and Versamid 125 catalyst.

NOTE: Epon Curing Agent V-25 is equivalent to the Versamid 125 catalyst and can be used as an alternate to the Versamid 125 in preparing the resin mixture.

(6) Spread an even coat of resin mixture in the center of the Mylar film, over an area four inches wide and four inches longer than the crack being repaired.

(7) Cut one ply of No. 181 fiberglass cloth four inches wide and four inches longer than the crack, and imbed the cloth in the resin mixture on the Mylar film.

(8) Saturate the fiberglass cloth with additional resin mixture and squeegee excess resin from the cloth.

(9) Repeat steps (6) through (8) until seven plies of No. 181 fiberglass cloth have been laminated on the Mylar film.

(10) Cut one ply of No. 120 fiberglass cloth; apply this cloth to the laminate using the same resin mixture and method of application as used for the plies of No. 181 fiberglass cloth.

(11) Apply a light coat of resin mixture on inner surface of the tank over an area equal in size to the fiberglass laminate patch.

(12) Center the laminate patch over the crack and prepared surface inside the water tank; place fiberglass cloth against tank surface.

(13) Place a vacuum attachment fitting at the edge of the laminate patch, between the Mylar film and surface of the tank.

(14) Seal the edge of the Mylar film and vacuum attachment fitting to the tank surface with Mylar pressure-sensitive tape or masking tape. (Seal must be airtight.)

(15) Using Mylar pressure-sensitive tape or masking tape, seal the crack on the exterior surface of the tank. (Seal must be airtight.)

(16) Connect hose from vacuum source to fitting attached to patch area.

(17) Apply a 10 (±2) psig vacuum to patch, and allow patch to cure at room temperature for a minimum of four hours. Vacuum must be maintained within tolerance for duration of curing period.

(18) At end of curing period, remove vacuum source, tape, vacuum fitting and Mylar film from inner surface of tank, and remove tape from crack on exterior surface of tank.

(19) Fill crack on exterior surface of tank with resin mixture, and allow sufficient time to cure.

(20) Check tank interior for scraps of tape, loose resin or residue, etc; remove any loose material from tank.

(21) Install water tank (refer to Removal/Installation Water Tank).

FORWARD SERVICE PANEL SYSTEM DRAIN VALVE - MAINTENANCE PRACTICES

1. Removal/Installation System Drain Valve (see Figure 201)

A. Equipment Required - None.

B. Remove System Drain Valve.

(1) Drain water tank (refer to Chapter 12, SERVICING).

(2) Disconnect fill-drain tubing from valve. (Cap ends of tubing and tag for installation.)

(3) Disconnect valve shaft joint.

(4) Remove four bolts attaching valve to mounting bracket.

(5) Remove system drain valve.

Install System Drain Valve.

(1) Position system drain valve on mounting bracket.

(2) Install four bolts to mount valve on bracket.

(3) Connect valve shaft joint.

(4) Remove protective caps from tube ends and connect tubing to valve; tighten tubing nuts by hand until finger tight, then tighten three quarters turn maximum with wrench.

(5) Perform leak test (refer to 38-1-0, Adjustment/Test).

(6) Disinfect system (refer to 38-1-0, Unit Servicing).

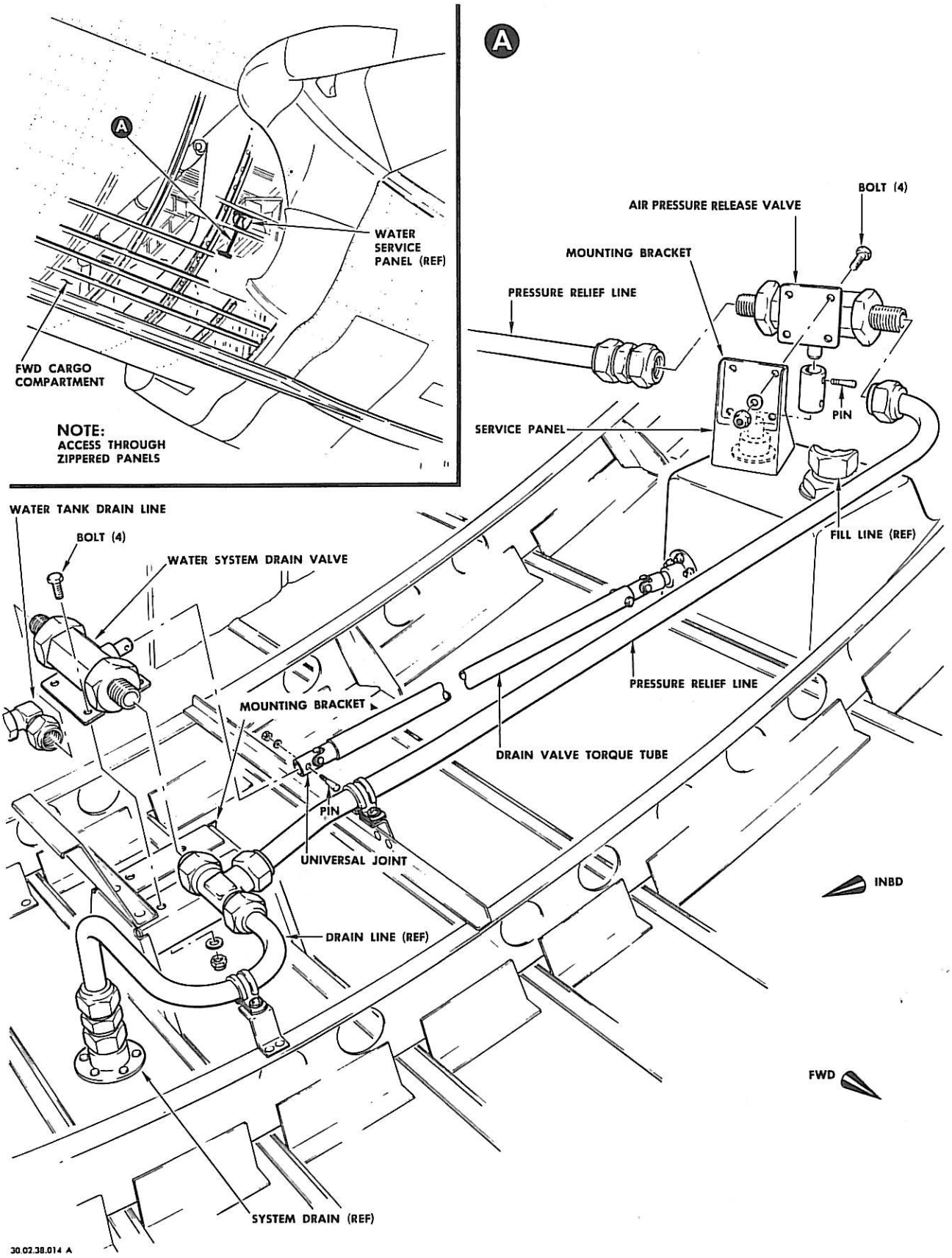

Service Panel System Drain Valve and System
Air Pressure Release Valve Installation
Figure 201

SYSTEM AIR PRESSURE RELEASE VALVE - MAINTENANCE PRACTICES

1. Removal/Installation System Air Pressure Release Valve (see 38-1-2, Figure 201)

   A. Equipment Required - None.

   B. Remove System Air Pressure Release Valve.

      (1) Open pressure release valve at water system service panel.

      (2) Disconnect tubing from forward and aft ends of valve. (Cap ends of tubing and tag for installation.)

      (3) Disconnect valve shaft joint.

      (4) Remove four mounting bolts.

      (5) Remove system air pressure release valve.

   C. Install System Air Pressure Release Valve.

      (1) Place pressure release valve handle, on water system service panel, in closed position.

      (2) Using pressure release valve shaft, operate valve to closed position.

      (3) Position pressure release valve.

      (4) Connect valve shaft joint.

      (5) Install four mounting bolts.

      (6) Remove protective caps from tube and connect tubing to forward and aft ends of valve; tighten nuts by hand until finger tight, then tighten three quarters turn maximum with wrench.

      (7) Perform leak test (refer to 38-1-0, Adjustment/Test).

ELECTRIC MOTOR-DRIVEN AIR PUMP - MAINTENANCE PRACTICES

1. Removal/Installation Main or (*Auxiliary) Electric Motor-Driven Air Pumps (see Figure 201)

A. General.

The removal and installation of the electric motor-driven air pumps are identical.

B. Equipment Required - None.

C. Remove Electric Motor-Driven Air Pump.

(1) If power is not removed from airplane, open WATER PUMP CONT and WATER PUMP WARN circuit breakers on main circuit breaker panel.

(2) Disconnect plug from air pump electric motor.

(3) Open pressure release valve at water system service panel.

(4) Disconnect tubing from compressed air outlet on inboard side of compressor.

(5) Remove four mounting bolts.

(6) Remove pump.

D. Install Electric Motor-Driven Air Pump.

(1) Position pump on mounting bracket.

(2) Install four mounting bolts.

(3) Remove protective caps from tubing and connect tubing from water supply tank to compressed air outlet on inboard side of compressor; tighten tubing nuts by hand until finger tight, then tighten three quarters turn maximum with wrench.

(4) Connect plug to air pump electric motor.

(5) Close pressure release valve.

(6) Close circuit breaker and remove warning sign.

(7) Pressurize system and check connection at compressor for leaks using bubble fluid.

*Applicable to airplanes CV1 through CV25.

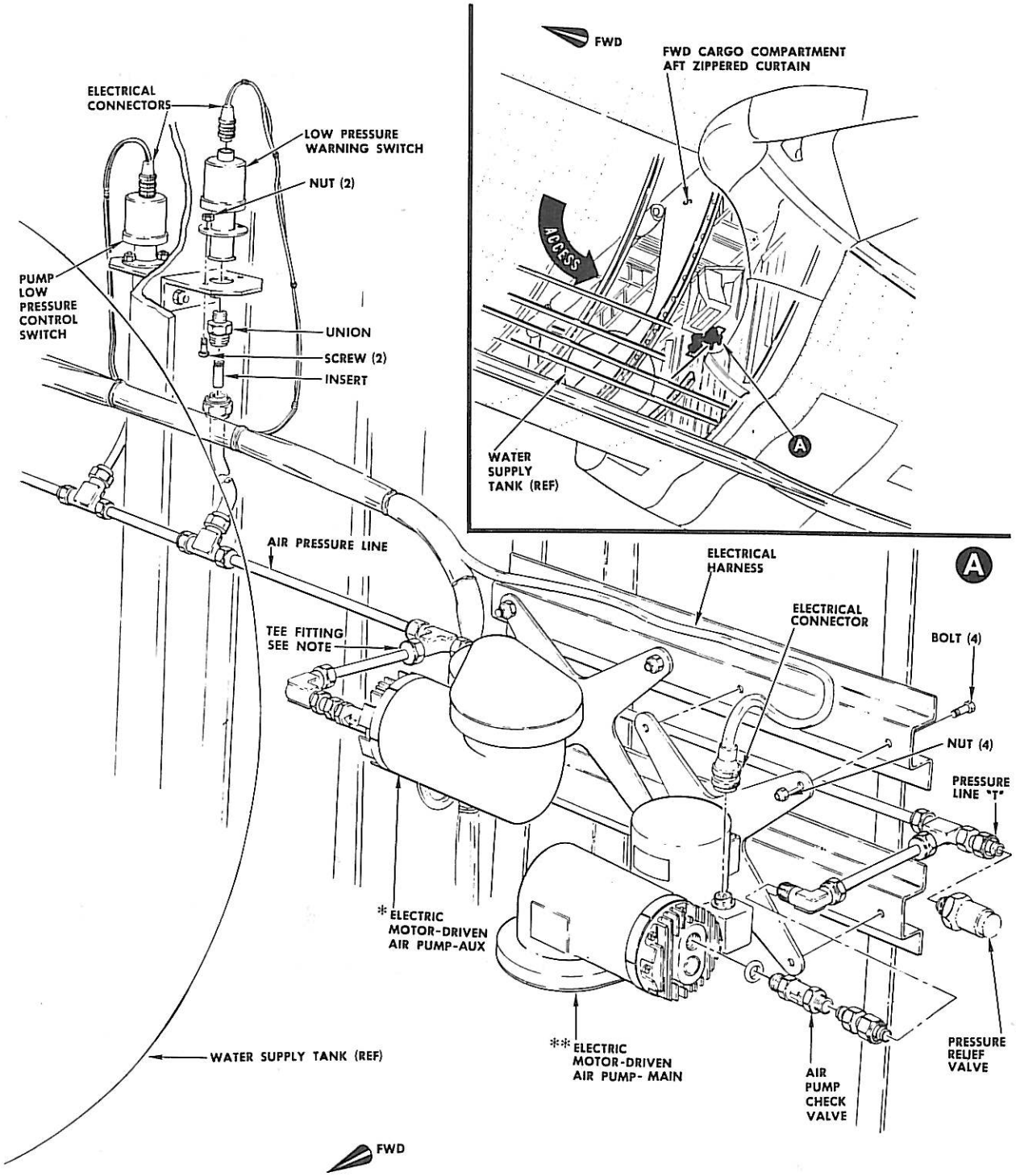

NOTE:
TEE FITTING IS PLUGGED FOR AIRPLANES CV 26 AND ON

EFFECTIVITY	
APPLICABLE TO AIRPLANES	
*	CV 1 THROUGH CV 25
**	CV 1 AND ON

30.02.38.031

Water System Pressurization Components
Installation
Figure 201

PRESSURE RELIEF VALVE - MAINTENANCE PRACTICES

1. Removal/Installation Pressure Relief Valve (see 38-1-4, Figure 201)

   A. Equipment Required - None.

   B. Remove Pressure Relief Valve.

      (1) Open pressure release valve at water system service panel.

      (2) Remove retaining clamp from pressure relief valve.

      (3) Disconnect pressure relief valve by unscrewing it from "T" near top of motor-driven air pump.

   C. Install Pressure Relief Valve.

      (1) Install pressure relief valve by screwing it into "T" near top of motor-driven air pump.

      (2) Close pressure release valve.

      (3) Install pressure relief valve retaining clamp.

      (4) Test relief valve (refer to Adjustment/Test Pressure Relief Valve).

2. Adjustment/Test Pressure Relief Valve

   A. Equipment Required.

      (1) Source of 60 psig dry filtered air or nitrogen gas.

      (2) Air Pressure manual shutoff valve.

      (3) Air pressure gage calibrated in one pound increments, suitable for checking system pressure of 60 psig.

   B. Test Procedure.

      (1) If power is not removed from airplane, open WATER PUMP CONT and WATER PUMP WARN circuit breakers on main circuit breaker panel.

      (2) Disconnect tubing from air pressure outlet of system air pump.

      (3) Connect air pressure gage to pressure line; connect shutoff valve to pressure gage.

      (4) Connect source of 60 psig dry air or nitrogen gas pressure to shut-off valve.

      (5) Pressurize system and observe that relief valve relieves system pressure at 49 (±1) psig.

NOTE: No leakage is allowed at relief valve connection to "T" fitting, up to a pressure of 49 psig.

(6) Close pressure shutoff valve and observe that relief valve reseats at a minimum pressure of 42 psig.

(7) When test is completed, remove source of air pressure, remove pressure gage and shutoff valve and reconnect pressure line to pump.

(8) Close WATER PUMP CONT and WATER PUMP WARN circuit breakers and remove warning sign.

(9) Pressurize system and check air pressure outlet fitting on system air pump for leakage.

PUMP LOW PRESSURE CONTROL AND WARNING LIGHT SWITCHES - MAINTENANCE PRACTICES

1. Removal/Installation Pump Low Pressure Control and Warning Light Switches (see 38-1-4, Figure 201)

A. General.

The procedures for removal and installation of the pump low-pressure control switch and the low pressure warning light switch are identical.

B. Equipment Required - None.

C. Remove Low Pressure Switch.

(1) If power is not removed from airplane, open WATER PUMP CONT and WATER PUMP WARN circuit breakers on the main circuit breaker panel.

(2) Open pressure release valve at water system service panel.

(3) Disconnect air pressure line from low pressure switch pressure port.

(4) Remove two leads from switch.

(5) Remove two mounting bolts.

(6) Remove switch.

D. Install Low Pressure Switch.

(1) Position low pressure switch on mounting bracket.

(2) Install two mounting bolts.

(3) Remove protective cap and connect air pressure line to low pressure switch pressure port; tighten tubing nut by hand until finger tight, then tighten three quarters turn maximum with wrench.

(4) Connect two leads to switch.

(5) Close pressure release valve.

(6) Close circuit breakers.

(7) Pressurize system and check connection at low pressure switch for leaks using bubble fluid.

WATER HEATER - MAINTENANCE PRACTICES

1. Removal/Installation Water Heaters (see Figure 201)

A. General.

The procedures for removal and installation of the forward and aft lavatory water heaters are similar.

B. Equipment Required

(1) One-gallon container.

(2) Torque wrench calibrated in foot-pounds.

(3) Thermometer calibrated to 150 degrees F (66 degrees C).

(4) External source of ac electrical power.

C. Remove Water Heater.

(1) Open three LAVATORY HOT WATER circuit breakers and WATER PUMP CONT and WATER PUMP WARN circuit breakers.

(2) Open pressure release valve at water system service panel.

(3) Open drain valve at bottom of heater and drain into one-gallon receptacle.

(4) Disconnect electrical wiring from fusible overheat switch and from heating elements as necessary to remove heater.

(5) Disconnect water inlet and outlet couplings and cap ends of fittings and lines.

(6) Remove mounting bolts and remove water heater.

(7) Remove thermoswitch, heating elements, overheat switch, and plugs from heater.

D. Install Water Heater.

(1) Install thermoswitch, heating elements, overheat switch, and plugs in heater. Safety plugs.

CAUTION: MAXIMUM TORQUE ON THERMOSWITCH IS 30 FOOT-POUNDS. EXCESS TORQUE WILL CHANGE TEMPERATURE SETTINGS.

(2) Position water heater on mounting bracket and install mounting bolts.

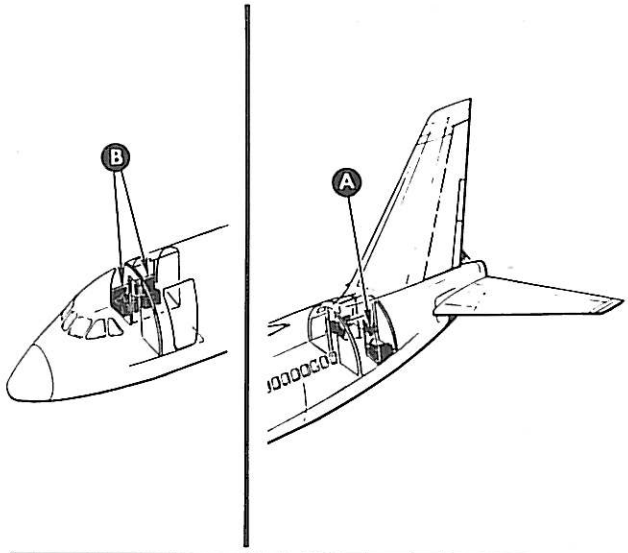

A

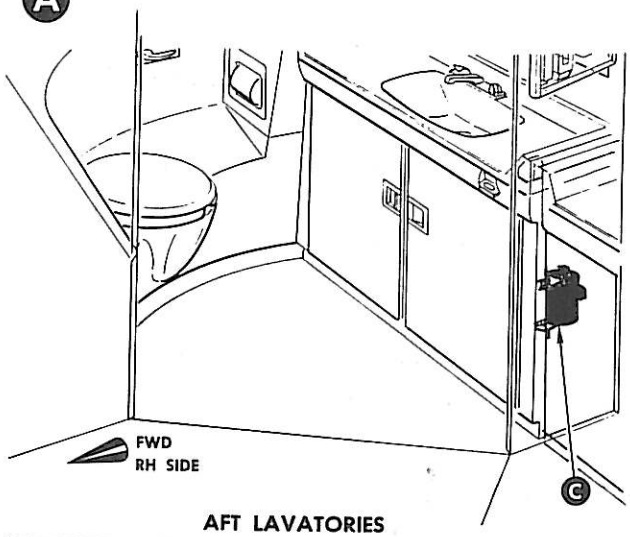

AFT LAVATORIES

B

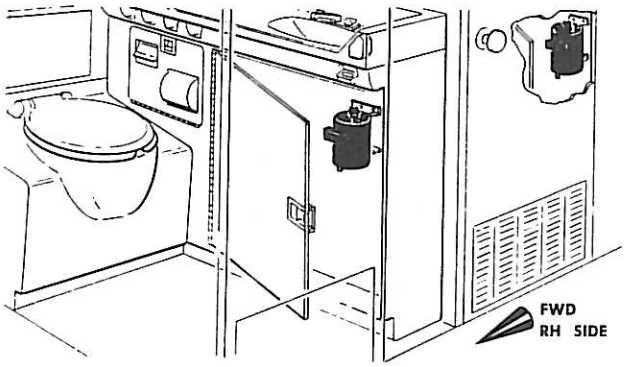

FORWARD LAVATORIES

C

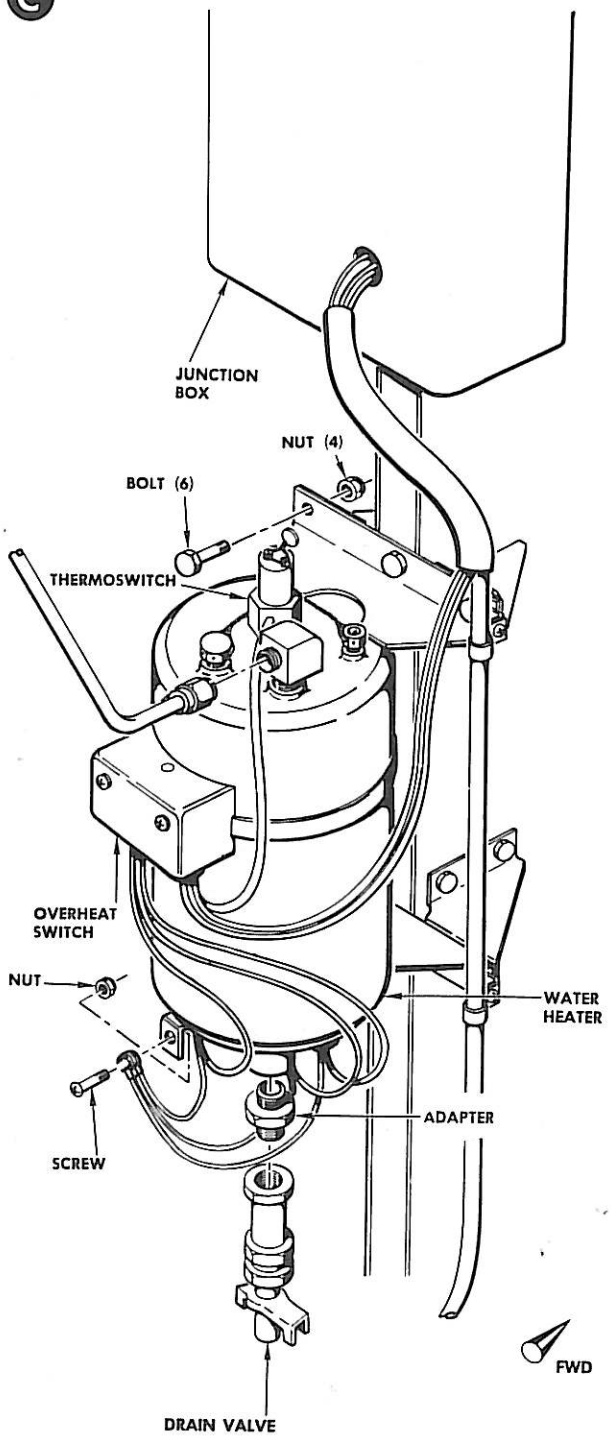

NOTE:
AFT LAVATORY WATER HEATER SHOWN—FORWARD LAVATORY WATER HEATER INSTALLATION SIMILAR

30.02.38.028A

Water Heater and Water Heater Drain Valve Installation
Figure 201

(3) Remove protective caps from water outlet fitting on top of water heater.

(4) Connect electrical wiring to overheat switch and heating elements.

(5) Fill heater with water (two quarts) at 70 - 90 degrees F (21-32 degrees C).

(6) Connect external source of electrical power to airplane (refer to Chapter 24, ELECTRICAL POWER). Close water heater circuit breakers and actuate appropriate heater switch on stewardess panel to ON position.

(7) Allow water heater to heat for five minutes. Insert thermometer in water (near thermoswitch) through water outlet in top of water heater. Water temperature should be 128 (±5) degrees F (53(±3) degrees C).

(8) Adjust thermoswitch adjusting screw under cap on thermoswitch head as necessary to increase or decrease water temperature. Turn screw in direction indicated by arrow on head of thermoswitch. One full turn of adjusting screw changes water temperature 100 degrees F (55 degrees C).

CAUTION: DO NOT TURN ADJUSTING SCREW IN EITHER DIRECTION FARTHER THAN NECESSARY FOR DESIRED OPERATION.

(9) Remove protective caps from water inlet and outlet lines and fittings and connect lines to water heater. Tighten tubing nuts by hand until finger tight, then tighten three-quarters turn with wrench.

(10) Check that heater drain valve is closed.

(11) Close water system pressure release valve.

(12) Perform leak test (refer to 38-1-0, Adjustment/Test).

(13) Pressurize water system. Hold hot water spigot in open position until water flows from faucet.

(14) Disinfect system (refer to 38-1-0, Unit Servicing Water System Disinfection Procedure).

(15) Close circuit breakers.

(16) Actuate lavatory heater switch to ON position and check water for proper temperature.

WATER HEATER DRAIN VALVE - MAINTENANCE PRACTICES

1. Removal/Installation Water Heater Drain Valve (see 38-1-7 Figure 201)

A. General.

Removal and installation of the two forward and one aft water heater drain valves is similar. The following procedure is for the aft water heater drain valve.

B. Equipment Required.

(1) One-gallon receptacle.

C. Remove Water Heater Drain Valve.

(1) Open three AFT HOT WATER HEATER circuit breakers.

(2) Open WATER PUMP CONT and WATER PUMP WARN circuit breakers.

(3) Open pressure release valve at water system service panel.

(4) Open water heater drain valve at bottom of heater and drain heater into a one-gallon receptacle.

(5) Unscrew water heater drain valve from nipple on bottom of water heater.

D. Install Water Heater Drain Valve.

(1) Screw water heater drain valve to nipple on bottom of water heater.

(2) Close pressure release valve.

(3) Perform leak test (refer to 38-1-0, Adjustment/Test).

(4) Hold water spigot in open position. With system pressurized, heater will refill.

(5) Actuate lavatory heater switch to ON position.

(6) Disinfect system (refer to 38-1-0, Unit Servicing).

(7) Close circuit breaker and remove warning sign.

(8) Test drain valve by turning winged fitting at bottom of valve.

LAVATORY WASH BASINS - MAINTENANCE PRACTICES

1. Removal/Installation Lavatory Wash Basins (see Figure 201)

A. General.

The wash basins are a part of the lavatory sink assembly. The basins are bonded to the counters and are removable as a unit. The following procedure is for the removal/installation of the aft left-hand wash basin assembly. Removal/installation of the remaining lavatory wash basin assemblies is similar.

B. Remove Lavatory Wash Basin.

(1) Open the WATER PUMP CONT and WATER PUMP WARN circuit breakers located on the main circuit breaker panel.

(2) Relieve the passenger water system pressure at the water system service panel.

(3) Disconnect all water lines from the sink assembly water spigots, and the wash basin drain.

(4) From under side of sink assembly, remove all sink assembly attachment bolts and screws.

(5) Lift sink assembly up and out of bin.

C. Install Lavatory Wash Basin.

(1) Position sink assembly on bin.

(2) Install attaching bolts and screws.

(3) Attach all water lines to sink assembly. Connect drain line to wash basin.

(4) Close pressure release valve on water system service panel.

(5) Close WATER PUMP CONT and WATER PUMP WARN circuit breakers.

(6) Perform leak test (refer to 38-1-0, Adjustment/Test).

EFFECTIVITY	
APPLICABLE TO AIRPLANES	
*	CV26 TO CV34

NOTE:
AFT LEFT-HAND LAVATORY WASH BASIN SHOWN— AFT RIGHT-HAND AND FORWARD LAVATORY WASH BASINS SIMILAR

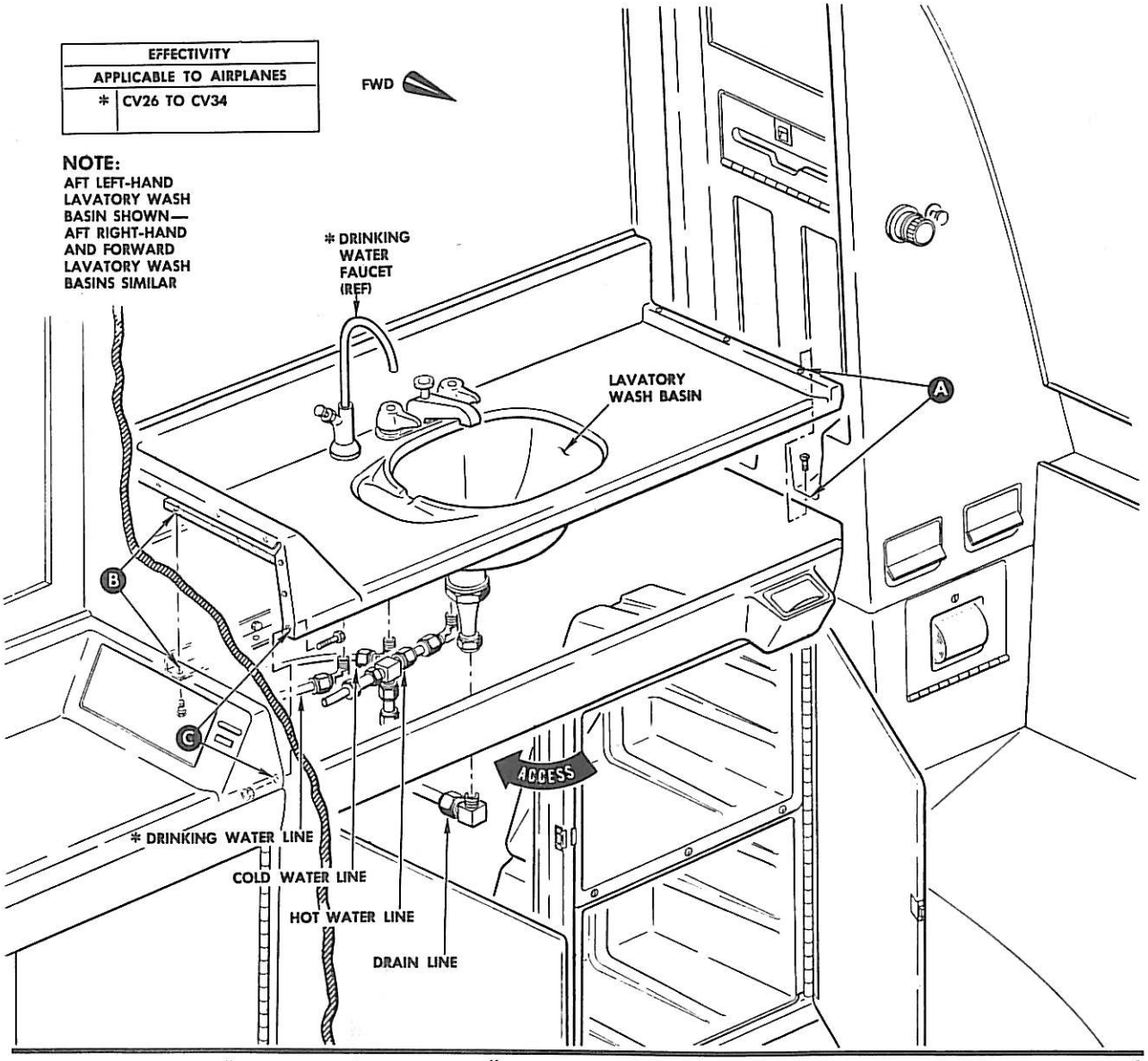

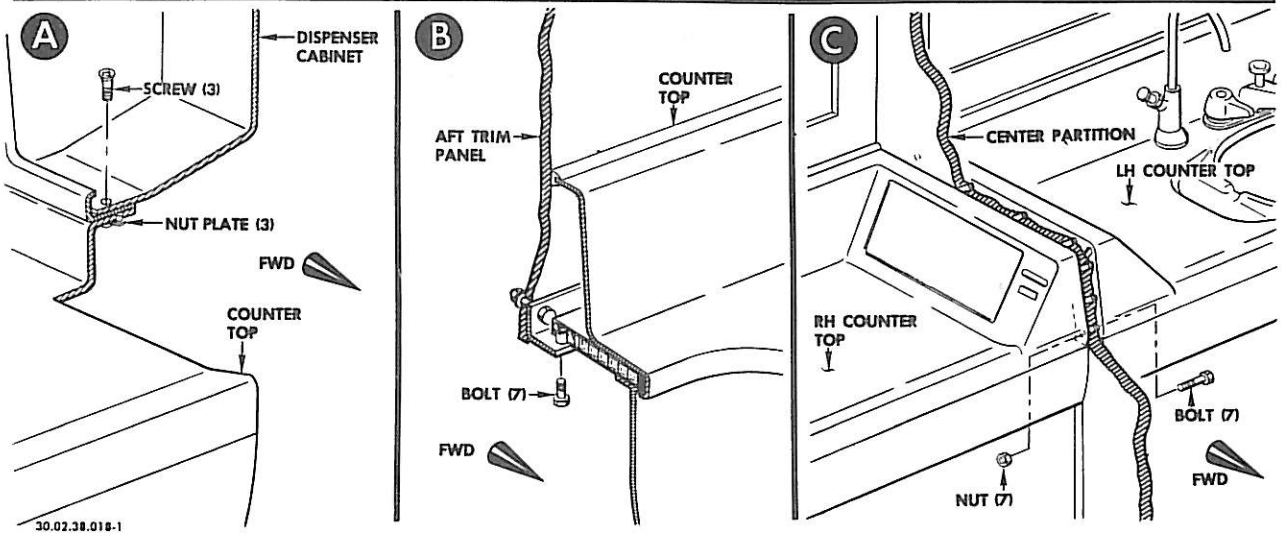

Lavatory Wash Basin Installation
Figure 201

WASTE SYSTEM - DESCRIPTION AND OPERATION

(This section, 38-2-0, is applicable to airplanes CV1 through CV34)

1. General

The waste system consists of four waste storage tanks, two service panels and associated plumbing (see Figure 1). The tanks are located below the toilets in each lavatory and are used as storage containers for all toilet waste, and waste water from the wash basins. Two external ground service panels, one for the two forward lavatories and one for the two aft lavatories, provide draining and flushing facilities for ground servicing. Flushing instructions are placarded on the inside of each service panel door.

2. Toilets

The four toilets are self-contained flushing type units, and are not connected to the airplane's fresh water system. The flushing system consists of a 115-volt ac motor, a self-priming pump, a self-cleaning filter, integral plumbing, and electrical harnesses (see Figure 2). The toilet flush cycle is started by actuating the flush handle. The flush handle positions a spring-loaded microswitch assembly that initiates a timed electrical flushing cycle. An electrical thermal timer permits the 115-volt motor to run for a 15 (±2) second cycle (see Figure 3). The motor drives the mechanical self-cleaning filter and liquid pump. The pump forces liquid from the filter through a flushing ring located in the top of the toilet bowl. The liquid leaves the flushing ring in a downward swirling action that cleans the bowl.

A. Waste Tank.

The waste tank is constructed of fiberglas, with the top edge forming a channel to receive a special Neoprene gasket which creates a seal between the tank and tank top. The tank bottom is designed to drain towards a high tolerance valve seat. A drain valve assembly is attached to the side of the tank and a bracket located at the top edge of the tank.

B. Waste Tank Top.

The waste tank top serves as a mounting platform for the major components of the toilet flushing system. In addition, the toilet bowl and a removable splash and sight restrictor are mounted on the tank top. The toilet bowl includes an integral flushing ring. An additional flushing ring for ground servicing is mounted on the under side of the tank top. The tank top provides a connection point for all the waste system plumbing and electrical harnesses with the exception of the drain line and drain valve actuating cable.

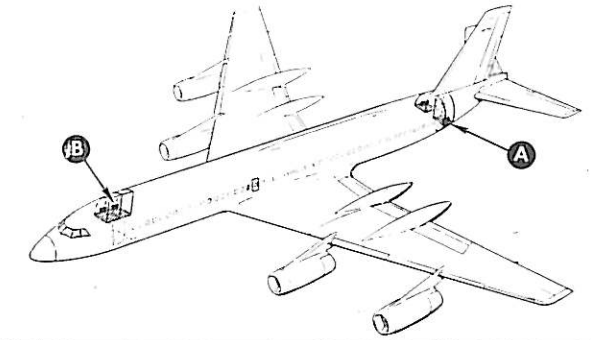

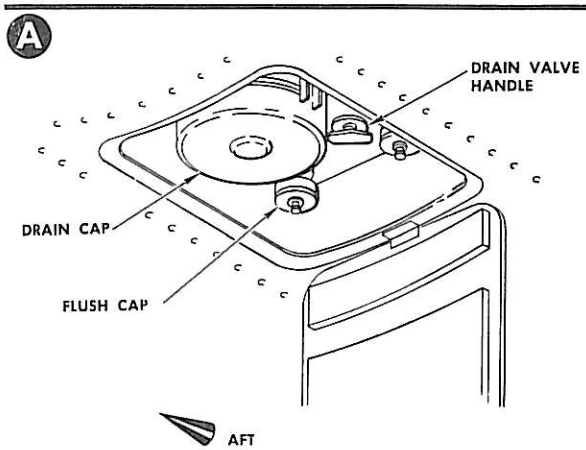

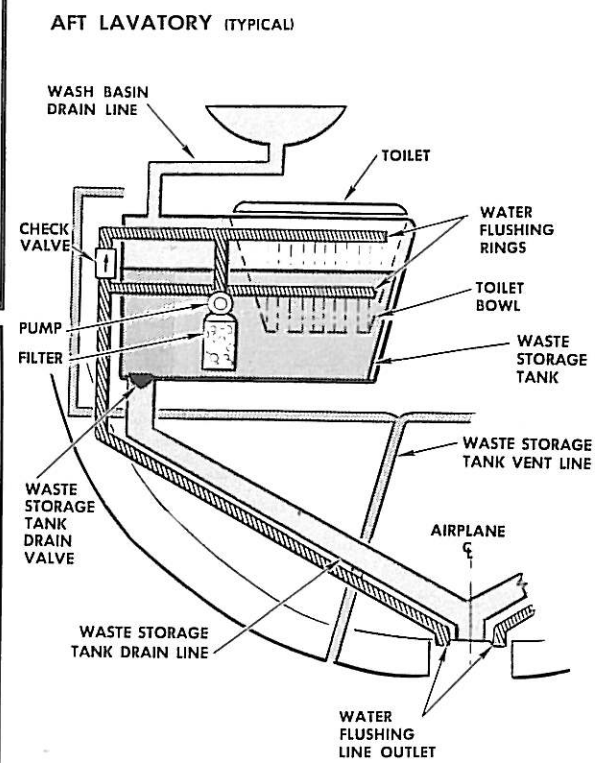

B

CAUTION: DO NOT PULL DRAIN HANDLE UNTIL DRAIN HOSE HAS BEEN CONNECTED

1. REMOVE DRAIN AND FLUSH CAPS.
2. CONNECT DRAIN AND FLUSH HOSES.
3. OPEN DRAIN VALVE BY DEPRESSING BUTTON IN CENTER OF HANDLE AND PULL (PULL HANDLE ALL THE WAY DOWN BEFORE RELEASING BUTTON.)
4. FLUSH TANK.
5. CLOSE DRAIN VALVE BY DEPRESSING BUTTON IN CENTER OF HANDLE AND PUSHING HANDLE ALL THE WAY UP.
6. DISCONNECT HOSES AND REPLACE DRAIN AND FLUSH CAPS.

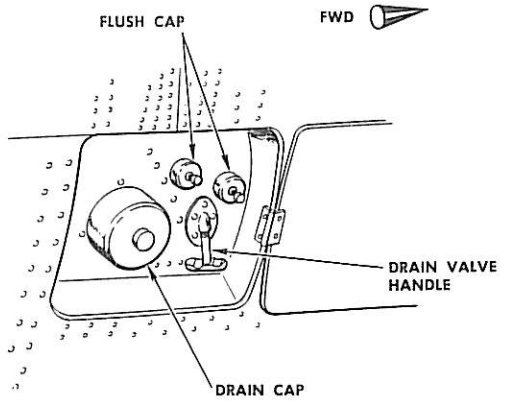

30.30.38.006B

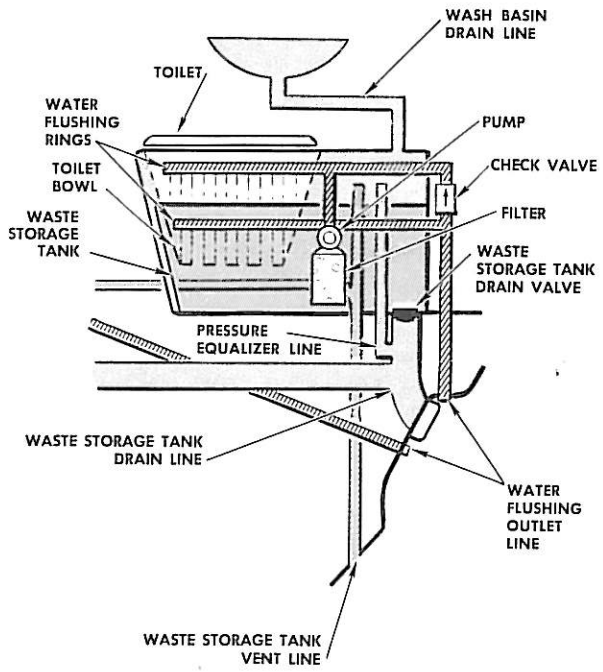

Water Waste System Schematic
Figure 1

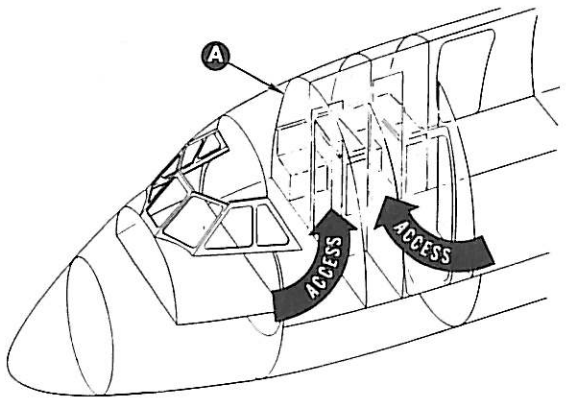
A
ACCESS
ACCESS

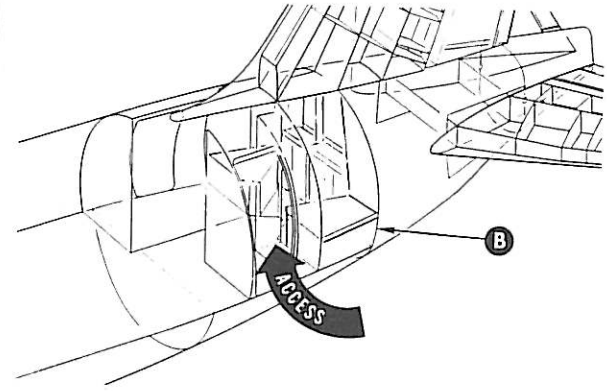
B
ACCESS

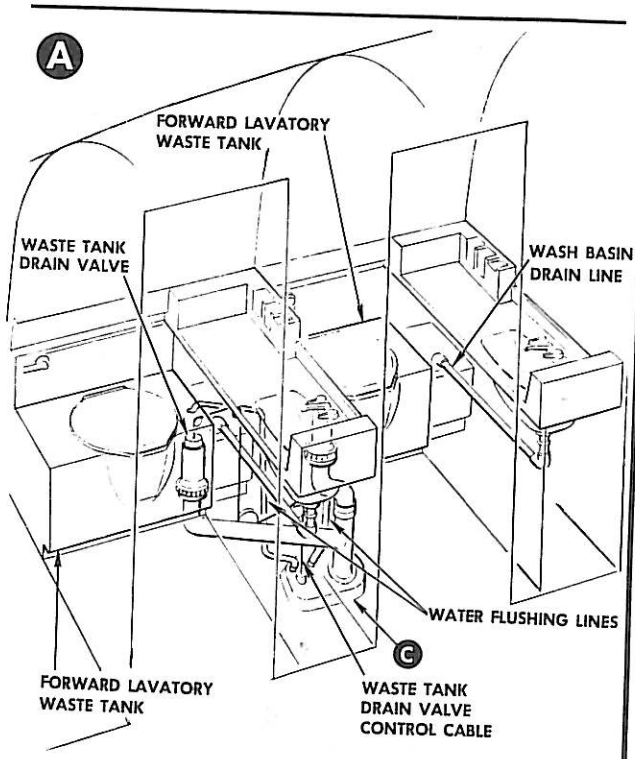
A
FORWARD LAVATORY WASTE TANK
WASTE TANK DRAIN VALVE
WASH BASIN DRAIN LINE
WATER FLUSHING LINES
C
FORWARD LAVATORY WASTE TANK
WASTE TANK DRAIN VALVE CONTROL CABLE

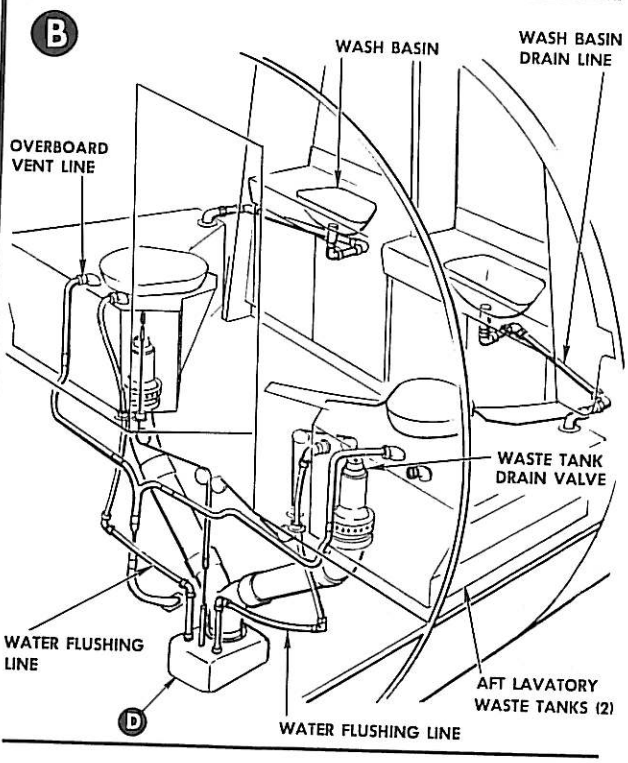
B
WASH BASIN
WASH BASIN DRAIN LINE
OVERBOARD VENT LINE
WASTE TANK DRAIN VALVE
WATER FLUSHING LINE
D
WATER FLUSHING LINE
AFT LAVATORY WASTE TANKS (2)

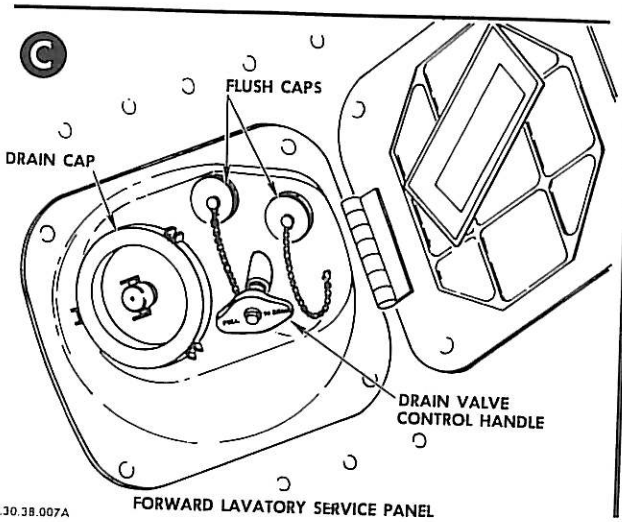
C
FLUSH CAPS
DRAIN CAP
DRAIN VALVE CONTROL HANDLE
30.30.38.007A
FORWARD LAVATORY SERVICE PANEL

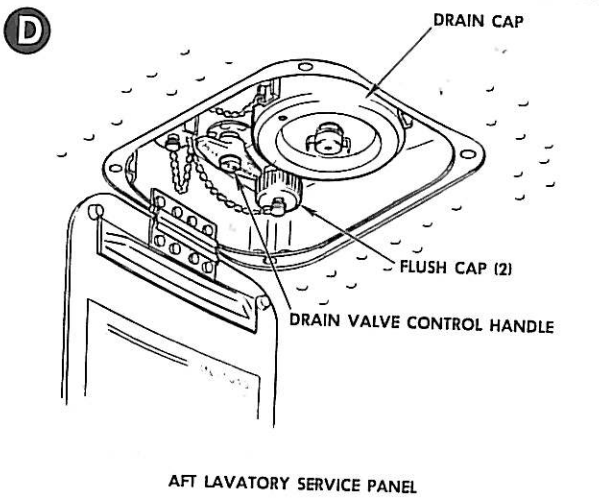
D
DRAIN CAP
FLUSH CAP (2)
DRAIN VALVE CONTROL HANDLE
AFT LAVATORY SERVICE PANEL

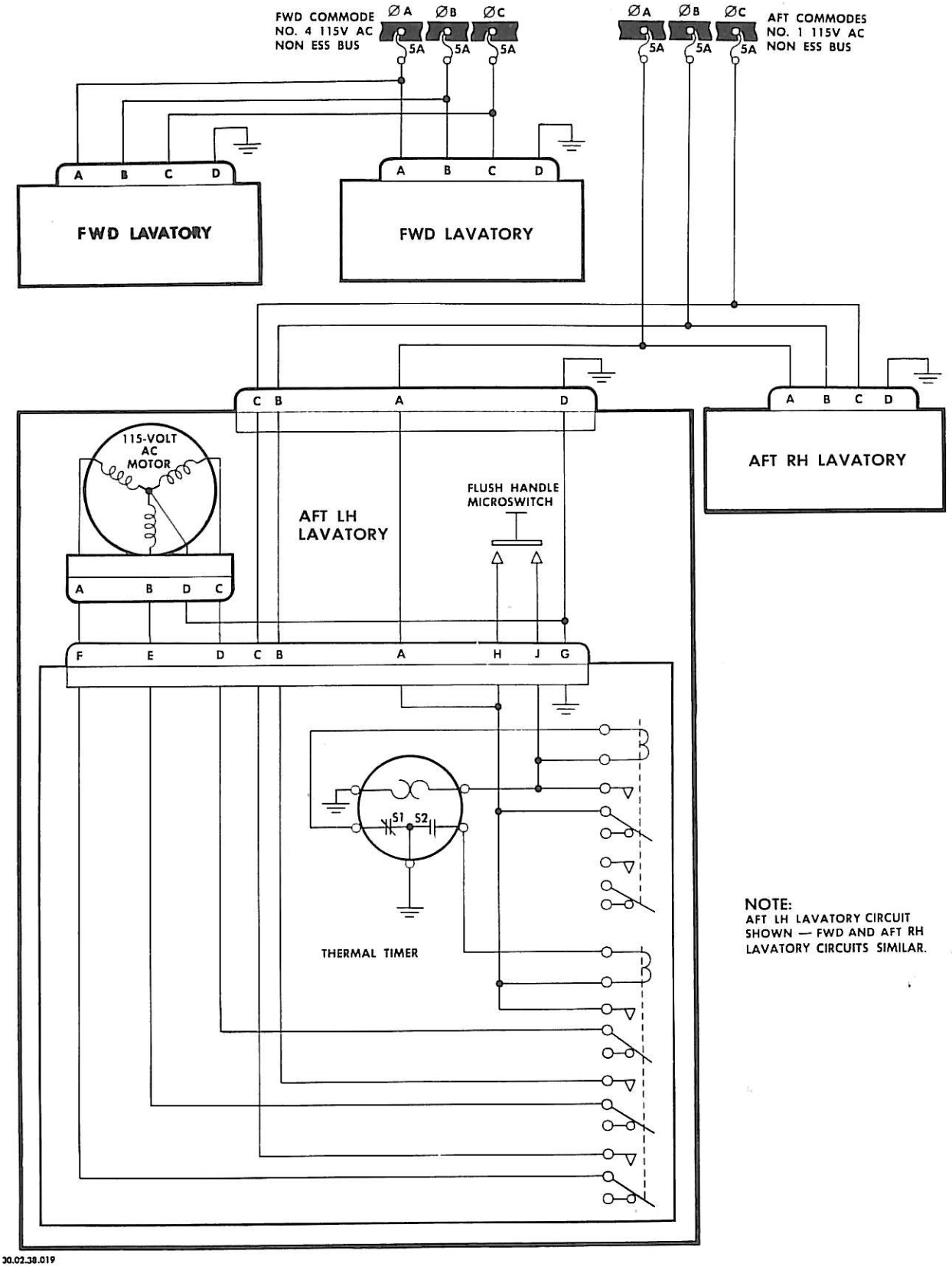

Toilet Electrical Circuit Schematic
Figure 3

C. Shroud Assembly.

The shroud assembly consists of upper and lower shroud sections. The toilet flush handle is mounted on the upper shroud. The toilet seat and top assembly are mounted on the lower shroud. The shrouds are formed from stain-proof and flame-resistant Royalite with a fiberglas backing.

D. Self Cleaning Filter.

The self-cleaning filter is constructed of flat wheel shaped stainless steel discs interleaved with similar spacers, and both mounted on a common spindle. Mounted outside the discs and spacers is a fixed stack of cleaner blades extending into gaps created by the spacers. The filter is rotated by a gear drive at 15 rpm. The cleaner blades continuously scrape the filter gaps free of waste material and permit liquid, free of solids, to be pumped into the flushing ring. The filter is mounted on the under side of the toilet tank top. Plumbing from the filter runs directly to the pump.

E. Drain Valve Assembly.

The drain valve assembly is constructed of stainless steel, chemically resistant Neoprene and plastics, and requires no maintenance lubrication. The basic components of the valve consist of a Neoprene accordion-type boot, a spring-loaded pulley housing, and seating plates. The boot, in addition to protecting the valve components, also is used in seating the valve. The valve is designed to form a positive seal under all normal altitude pressures. It is seated by 12 to 15 pounds of spring force. A maximum pull of twenty pounds at the ground service tee handle is required to unseat the valve. Valve travel of four inches permits all waste to drain from the tank.

F. Motor and Pump Assembly.

The motor is driven by 115-volt, 3-phase, 400 cps ac power. A high and low speed drive are located on opposite ends of the motor assembly. A three-phase thermal timer is used to control the motor operation. The high speed drive of the motor powers the liquid pump. The low speed drive powers the self-cleaning filter. The liquid pump is self-priming and corrosion resistant. The pump consists of a body, impeller, bearings, and end plates. The pump and motor assembly are shock-mounted to the tank top.

G. Thermal Timer Assembly.

The thermal timer is a self-contained assembly enclosed in a dust proof case mounted on the tank top. The timer assembly consists of two control relays and one thermal time delay relay. Electrical harnesses interconnect the timer with the flush handle microswitch, the toilet motor, and the toilet electrical power receptacle.

WASTE SYSTEM - TROUBLE SHOOTING

(This section, 38-2-0, is applicable to airplanes CV1 through CV34.)

POSSIBLE CAUSE	ISOLATION PROCEDURE AND CORRECTION
1. ODORS EMANATE FROM TOILET TANK UNIT	
A. Improper servicing of toilet system.	Drain and flush toilet system; insure that recommended service procedure is being followed; including use of proper chemical solution (refer to Chapter 12, SERVICING).
2. LIQUID IN DRAIN LINE AT GROUND SERVICE PANEL PRIOR TO OPENING DRAIN VALVE	
A. Damaged or obstructed drain valve.	If valve is obstructed, remove obstruction; if valve is damaged, replace valve.
3. TOILET FAILS TO FLUSH PROPERLY WITH ELECTRICAL POWER APPLIED TO CIRCUIT	
	NOTE: The following procedure is given for the aft left-hand toilet. The procedure is typical for the aft right-hand and the two forward toilets.
A. Faulty circuit from ac power distribution box to toilet electrical connector.	Install three AFT COMMODE 5-ampere limiters in ac power distribution box. Check for phase A, B, and C 115-volt ac power through limiters. If no power, replace faulty limiters. If power, remove limiters and check for continuity between limiter holders and aft left-hand toilet electrical connector pins A, B, and C. If no continuity, correct circuit. If continuity, check continuity from toilet connector pin D to ground. If no continuity, correct circuit.
B. One or more electrical components of toilet malfunctioning.	Check continuity from toilet electrical connector pins A, B, C, and D to toilet flushing cycle timer connector pins D, E, F, and L respectively. If no continuity, correct circuit.

(This section, 38-2-0, is applicable to airplanes CV1 through CV34)

1. Adjustment/Test Flushing Toilet Leak and Operational Check

A. General.

There are four toilets in the airplane. The following procedure is for the aft left-hand toilet. The procedure is similar for the aft right-hand and the two forward toilets.

B. Equipment Required.

(1) External source of ac electrical power.

(2) Source of 100 gallons of "city" water capable of being pumped at a rate of 10 gallons per minute with an inlet pressure of 25 psig.

(3) Drain tank with 50-gallon capacity.

C. Leak and Operational Check.

(1) Connect external source of power to airplane (refer to Chapter 24, ELECTRICAL POWER).

(2) Ensure that toilet drain valve handle located at aft service panel is in closed position.

(3) Connect source of water to aft toilet ground service filling connection.

(4) Turn on source of water and fill left-hand and right-hand toilet tanks with 25 gallons of water each. Water shall pass through toilet bowl flushing rings in addition to tank flushing rings.

(5) Actuate toilet flushing handle.

(6) System shall flush. Water shall flow from tank through motor, through bowl, to tank.

(7) Pump shall stop and water shall cease flowing in 14 to 20.5 seconds.

(8) Remove pressure cap from drain line at aft service panel.

(9) Pull drain valve handle at aft service panel and drain water into drain tank.

(10) Check all system connections and fittings for leaks.

(11) If any sign of leakage is found, repair leaks and retest per steps C. (2) through C. (11).

(12) Restore airplane to normal configuration.

TOILET FLUSH HANDLE AND MICROSWITCH - MAINTENANCE PRACTICES

(This section 38-2-1 is applicable to airplanes CV 1 through CV 34.)

1. Removal/Installation Toilet Flush Handle and Microswitch (see Figure 201)

A. General.

The following procedure is for the aft left-hand lavatory toilet flush handle and microswitch. The procedure is similar for the aft right-hand and the two forward lavatories flush handles and microswitches.

B. Equipment Required. None.

C. Remove Toilet Flush Handle and Microswitch.

(1) Remove three AFT TOILET limiters from ac power distribution box.

(2) Loosen set screw and slide flush handle free of actuating shaft.

(3) Remove two screws securing flush plate and spacer disc to microswitch assembly mounting bracket. Remove flush plate and spacer.

(4) Remove two mounting screws attaching microswitch assembly to mounting bracket. Carefully pull microswitch through access hole in shroud and remove two electrical leads.

(5) Remove microswitch from airplane.

D. Install Toilet Flush Handle and Microswitch.

(1) Connect electrical leads to microswitch.

(2) Position microswitch assembly on mounting bracket and attach with two screws.

(3) Position spacer disc and flush plate on shaft of microswitch assembly. Attach flush plate and spacer to microswitch mounting bracket with two screws.

(4) Position flush handle on microswitch assembly shaft and tighten set screw.

(5) Perform operational check (refer to Adjustment/Test Flushing Toilet Leak and Operational Check).

(6) Restore airplane to normal configuration.

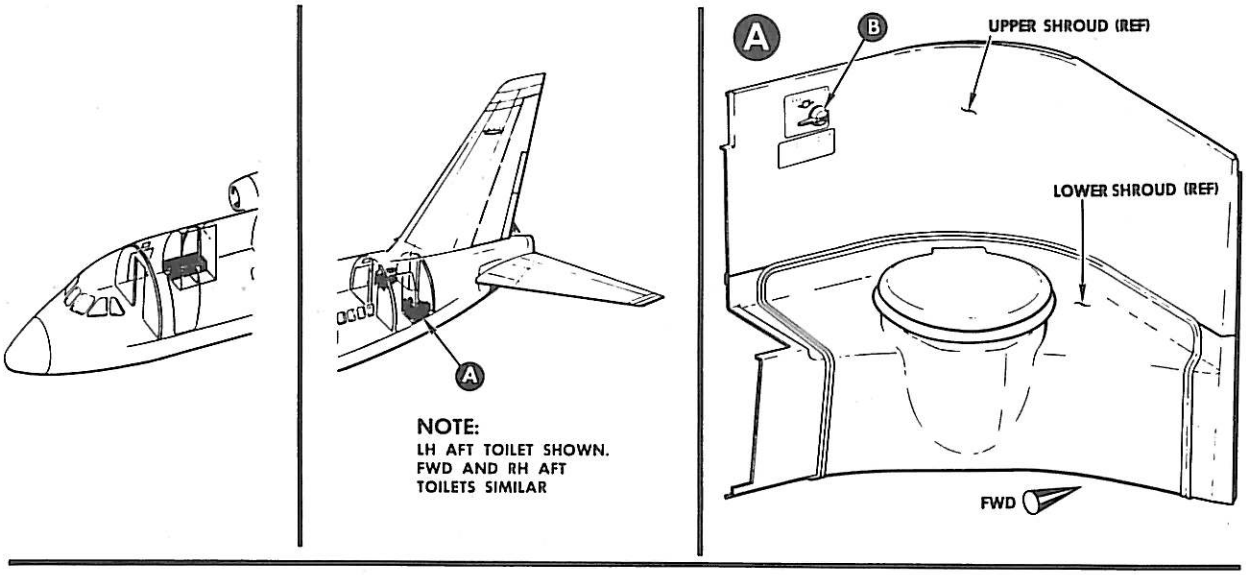

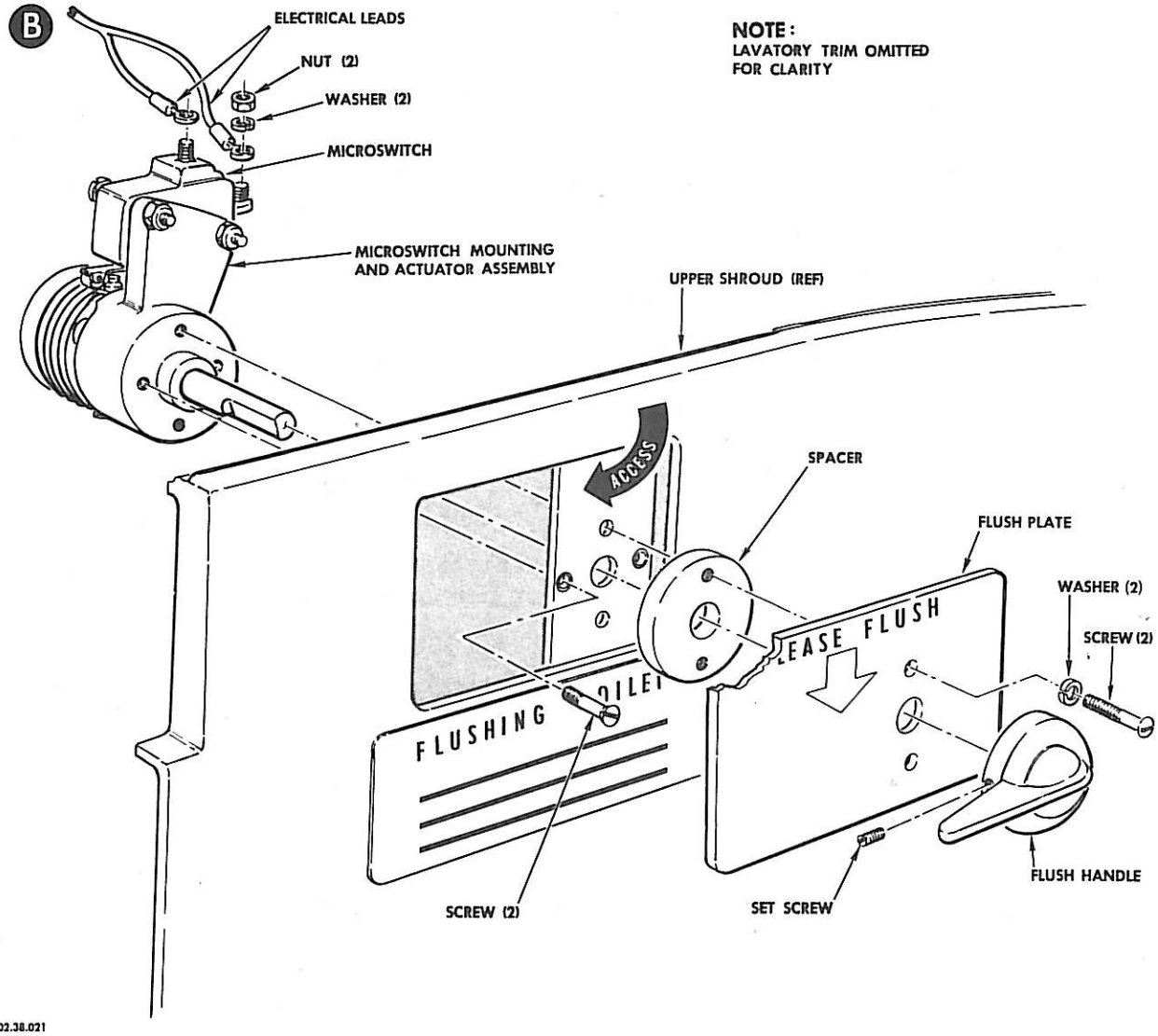

Toilet Flush Handle and Microswitch Installation
Figure 201

TOILET SHROUDS - MAINTENANCE PRACTICES

(This section, 38-2-2, is applicable to airplanes CV 1 through CV 34)

. Removal/Installation Toilet Shrouds (see Figure 201)

A. General.

The following procedure is for the aft left-hand lavatory toilet shrouds. The procedure is similar for the aft right-hand and the two forward lavatories toilet shrouds.

B. Equipment Required. None.

C. Remove Lower Toilet Shroud.

WARNING: THOROUGHLY WASH, FLUSH, AND RINSE ALL EXPOSED OR CONTAMINATED AREAS ON TOILET EXTERIOR WITH A STRONG DISINFECTANT PRIOR TO HANDLING.

(1) Remove three AFT COMMODE limiters from ac power distribution box.

(2) Lift lip of extruded trim far enough to remove screws securing lower shroud to upper shroud.

(3) Remove shroud from airplane.

D. Remove Upper Toilet Shroud.

(1) Remove toilet flush handle and microswitch assembly (refer to Removal/Installation Toilet Flush Handle and Microswitch).

(2) Remove lavatory trim as necessary to gain access to attachment screws for upper shroud (refer to Chapter 25, EQUIPMENT AND FURNISHINGS).

(3) Remove screws attaching upper shroud to lavatory trim and airplane structure.

(4) Carefully lift upper shroud up and inboard and disconnect eletrical harness. Remove shroud from airplane.

E. Install Upper Toilet Shroud.

(1) Position upper shroud on waste tank and attach electrical harness to aft side of shroud.

(2) Attach shroud to lavatory trim and airplane structure.

(3) Install lavatory trim (refer to Chapter 25, EQUIPMENT AND FURNISHINGS).

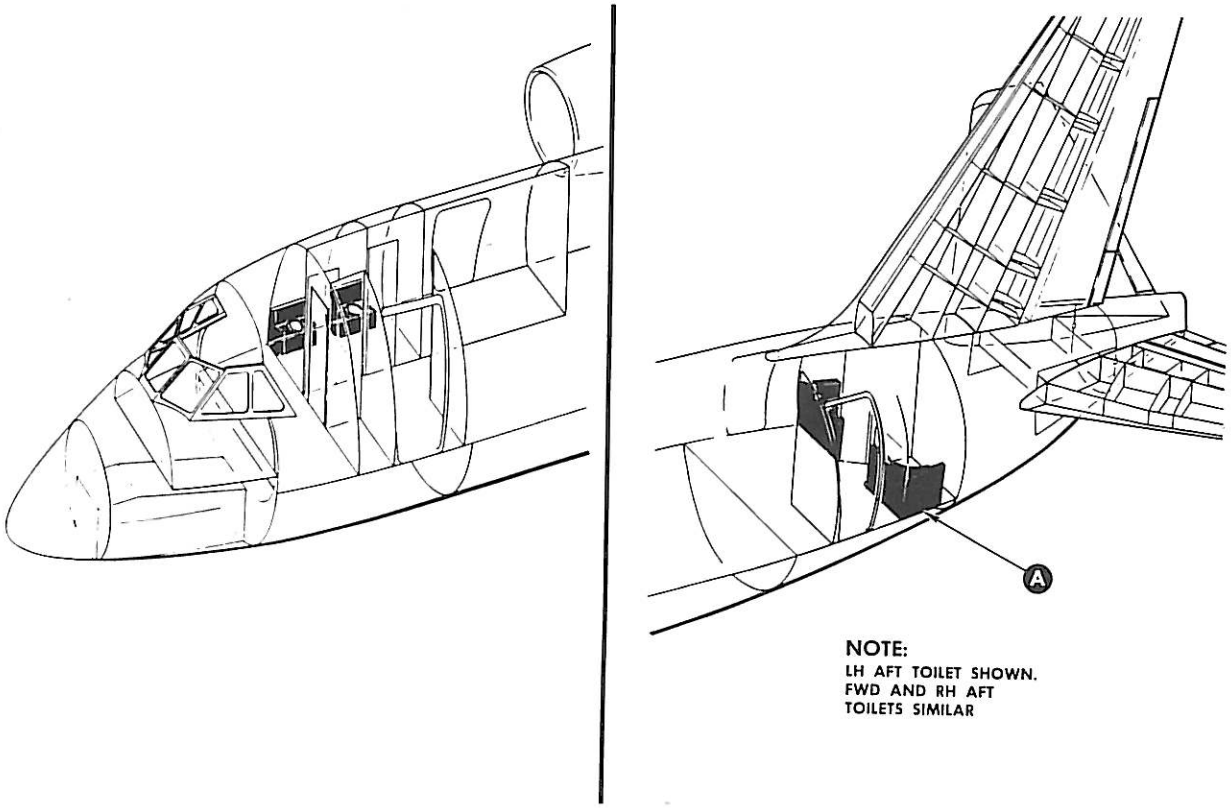

NOTE:
LH AFT TOILET SHOWN.
FWD AND RH AFT
TOILETS SIMILAR

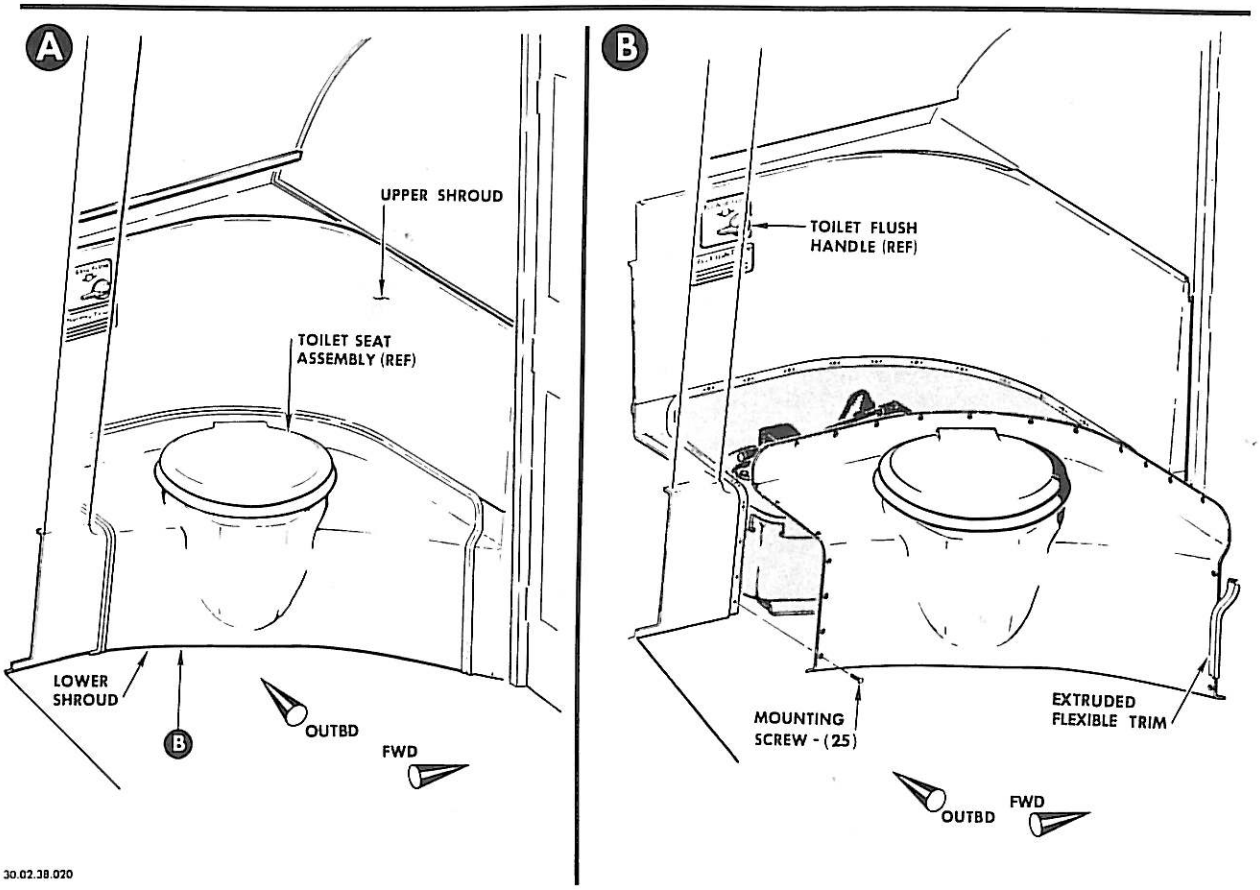

30.02.38.020

Toilet Shroud Installation
Figure 201

F. Install Lower Toilet Shroud.

(1) Position lower shroud on toilet waste tank so that it aligns with upper shroud attachments holes.

(2) Attach lower shroud to upper shroud with screws.

(3) Install extruded trim between upper and lower shroud.

(4) Restore airplane to normal configuration.

TOILET WASTE TANK TOP - MAINTENANCE PRACTICES

(This section, 38-2-3, is applicable to airplanes CV 1 through CV 34.)

1. Removal/Installation Toilet Waste Tank Top (see Figure 201)

A. General.

The following procedure is for the aft left-hand lavatory toilet waste tank top. The procedure is similar for the aft right-hand and the two forward lavatories toilet tank tops.

B. Equipment Required. None.

C. Remove Toilet Waste Tank Top.

WARNING: THOROUGHLY WASH, FLUSH, AND RINSE ALL EXPOSED OR CONTAMINATED AREAS ON TOILET EXTERIOR WITH A STRONG DISINFECTANT PRIOR TO HANDLING.

(1) Drain and flush tank per instructions on aft lavatory service panel.

(2) Remove three AFT COMMODE limiters from ac power distribution box.

(3) Remove upper and lower toilet shroud (refer to Removal/Installation Toilet Shrouds).

(4) Disconnect wash basin drain line, air vent line, flush line and pressure equalizer line from toilet tank top.

(5) Disconnect toilet electrical harness from receptacle on tank top.

(6) Release fasteners that secure top to tank.

(7) Remove toilet tank top from airplane.

D. Install Toilet Tank Top.

(1) Position toilet tank top on toilet tank. Attach top to tank with fasteners.

(2) Connect wash basin drain line, air vent line, flush line and pressure equalizer line to tank top.

(3) Connect toilet electrical harness to receptacle on tank top.

(4) Install upper and lower toilet shrouds (refer to Removal/Installation Toilet Shrouds).

(5) Perform operational check (refer to Adjustment/Test Flushing Toilet Leak and Operational Check).

(6) Restore airplane to normal configuration.

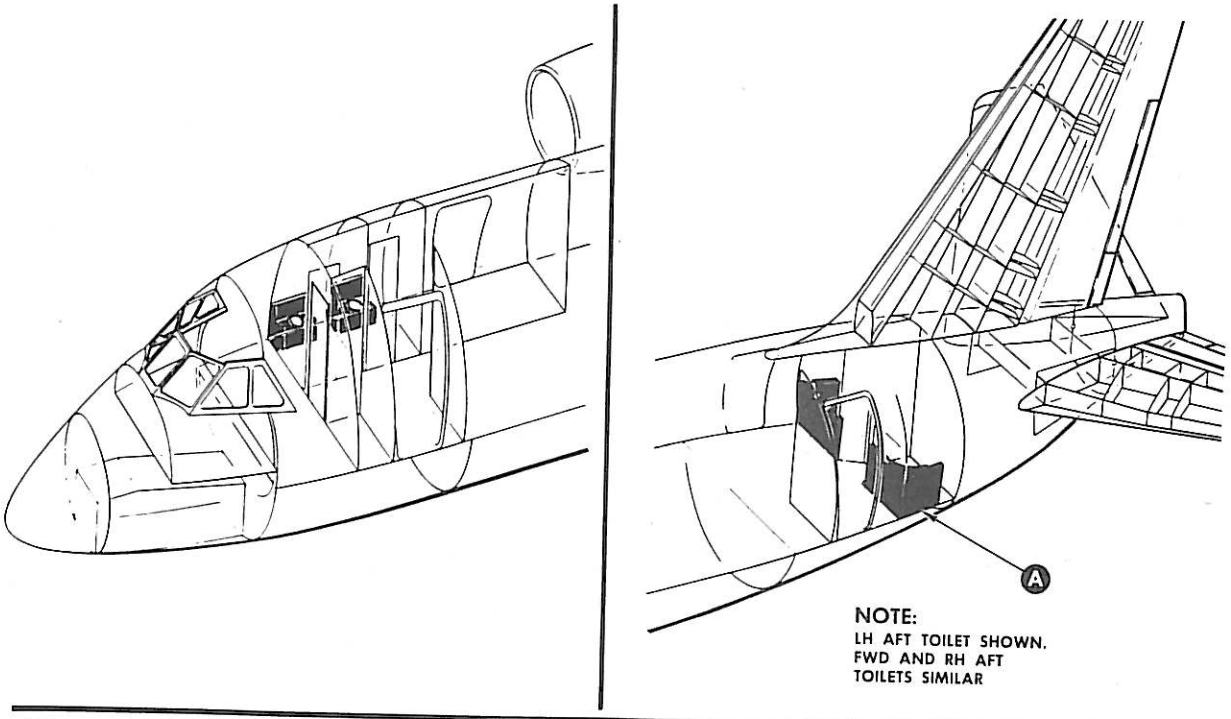

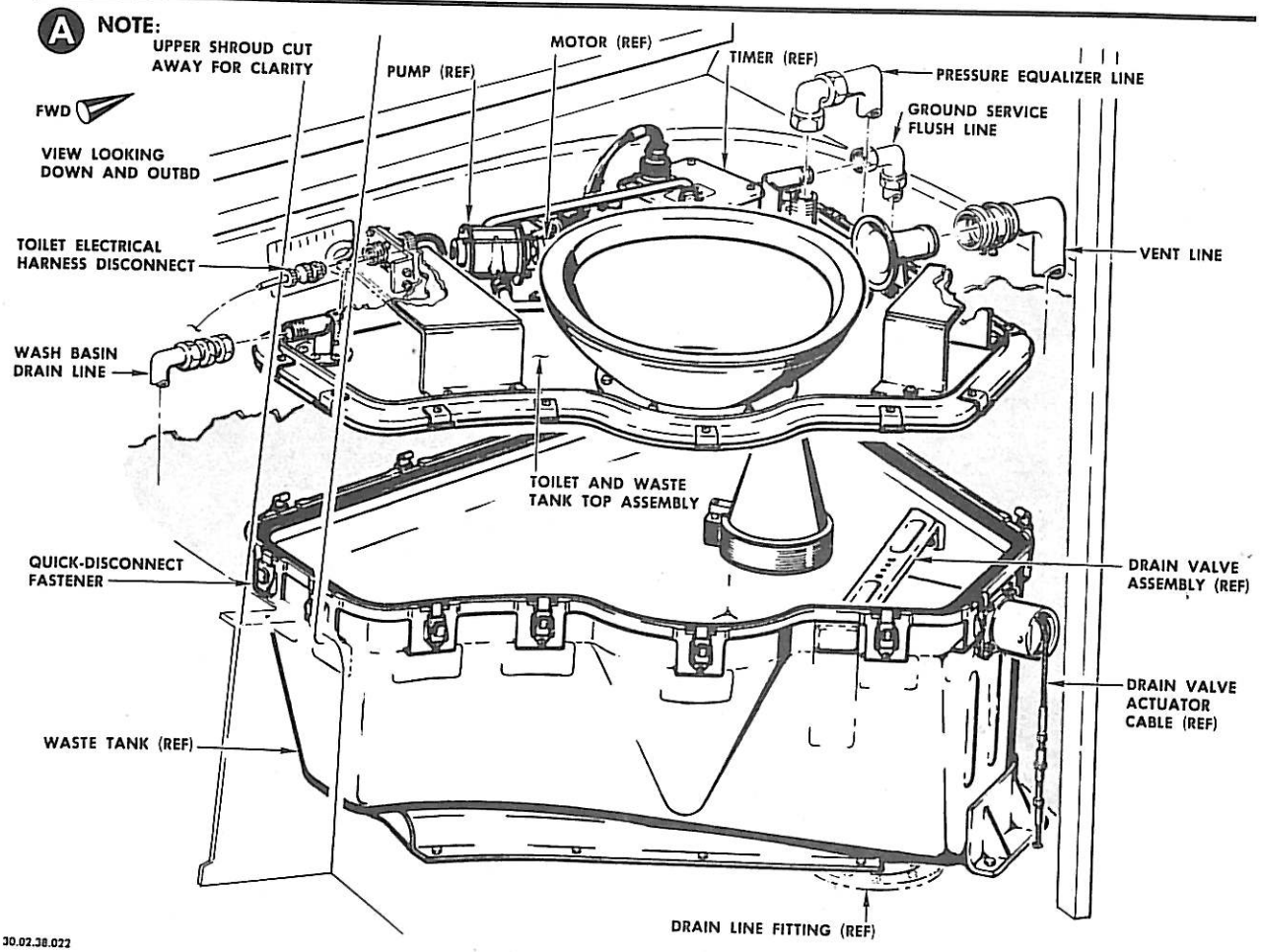

Toilet Waste Tank Top Installation
Figure 201

TOILET DRAIN VALVE - MAINTENANCE PRACTICES

(This section, 38-2-4, is applicable to airplanes CV 1 through CV 34.)

1. Removal/Installation Toilet Drain Valve (see Figure 201)

A. General.

The following procedure is for the aft left-hand lavatory toilet drain valve. The procedure is similar for the aft right-hand and the two forward lavatories toilet drain valves.

B. Equipment Required.

(1) Sealant EC801.

C. Remove Toilet Drain Valve.

WARNING: THOROUGHLY WASH, FLUSH, AND RINSE ALL EXPOSED OR CONTAMINATED AREAS ON TOILET EXTERIOR WITH A STRONG DISINFECTANT PRIOR TO HANDLING.

(1) Drain and flush toilet per instructions placarded on aft lavatories service panel.

(2) Remove three AFT COMMODE limiters from ac power distribution box.

(3) Remove toilet shrouds (refer to Removal/Installation Toilet Shrouds).

(4) Remove toilet tank top (refer to Removal/Installation Toilet Waste Tank Top).

(5) Disconnect drain valve cable at turnbuckle above lavatory floor. Restrict cable remaining in airplane to prevent end from slipping through hole in drip pan to area underneath floor.

(6) Compress valve with clamp or by other means.

(7) Remove sealant from gasket plate and screws attaching valve housing to tank.

(8) Remove screws attaching gasket plate to tank. Remove plate and discard gasket.

(9) Remove screws and attachments connecting valve housing to mounting bracket at top to tank.

(10) Remove inner seal and seal plate where valve housing attaches to inner side of tank. Remove drain from tank.

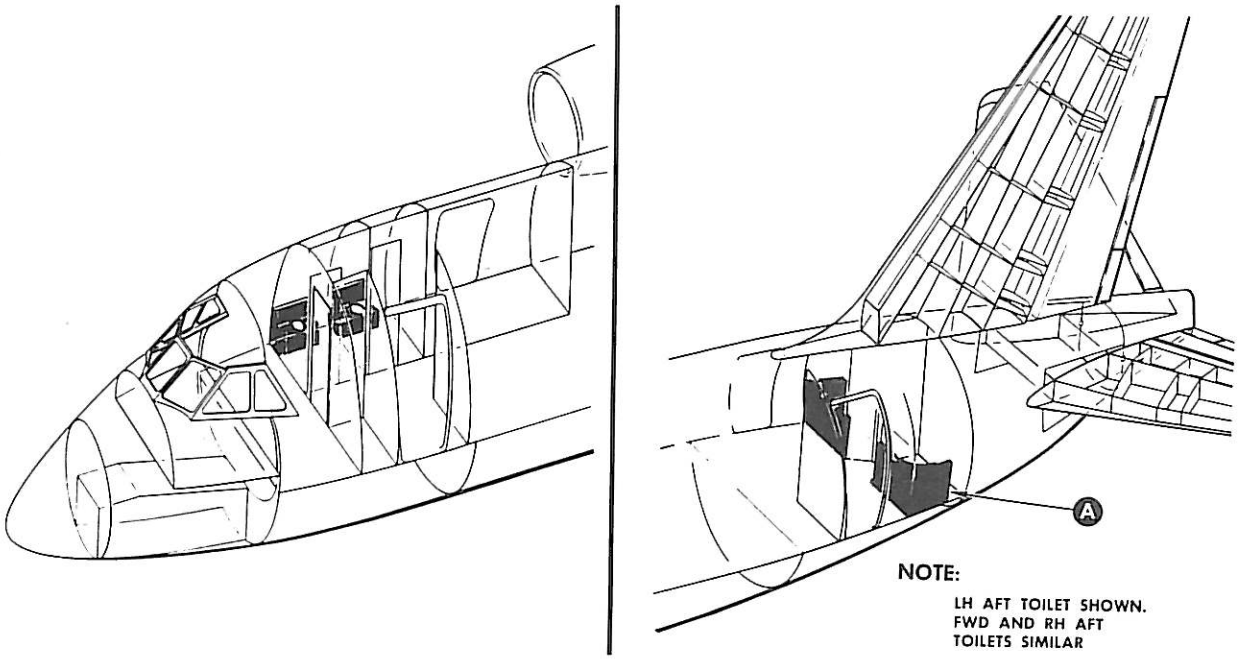

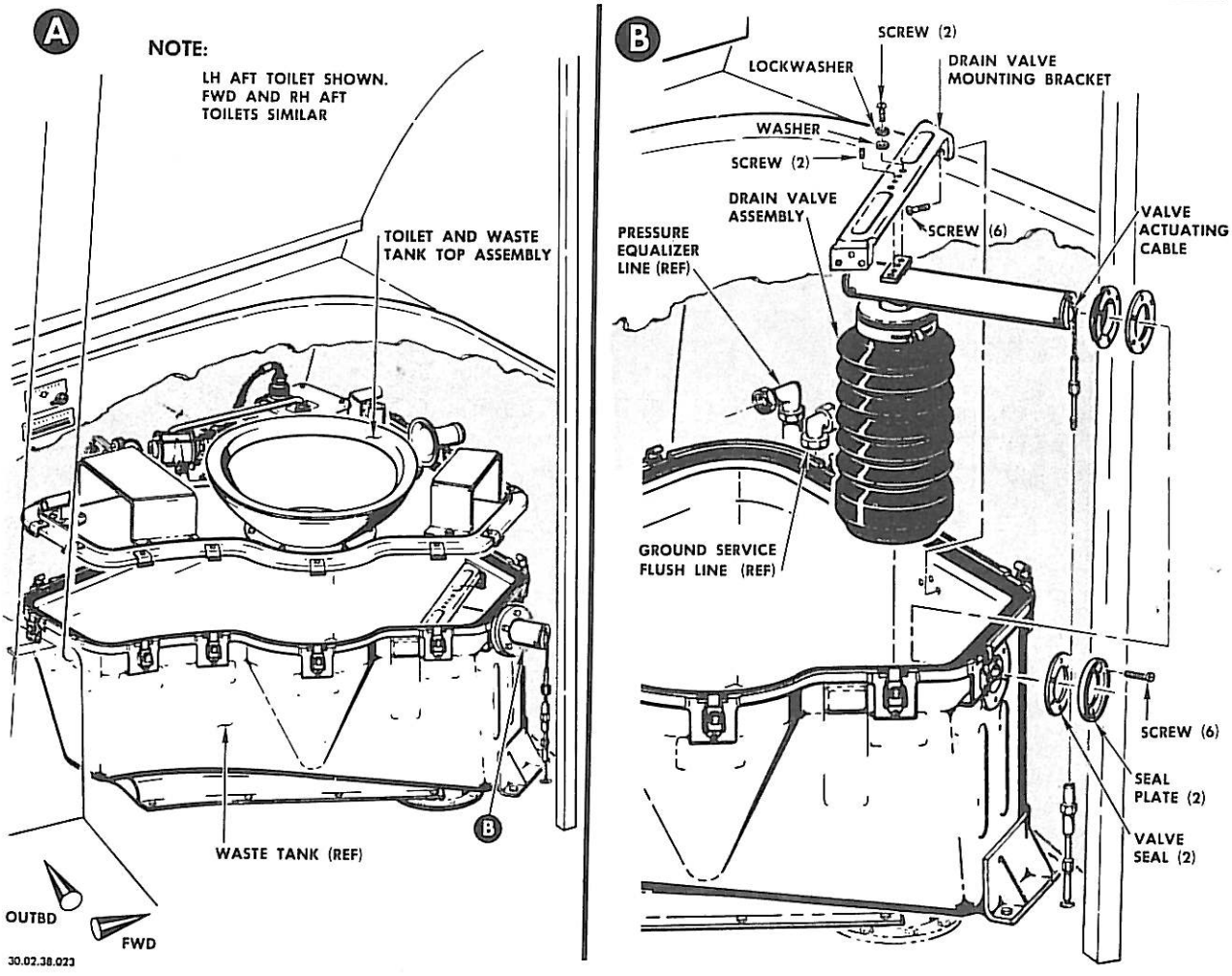

Waste Tank Drain Valve Installation
Figure 201

D. Install Toilet Drain Valve.

(1) Apply coat of EC801 primer to area of valve housing that seats in tank side.

(2) Slip seal and seal plate over housing.

(3) Compress valve with clamp and insert into holder on side of tank. Rotate valve slightly to spread sealant.

(4) Attach valve to mounting bracket with screws.

(5) Slip gasket and gasket plate over valve housing protruding from tank. Secure valve housing to holder with screws.

(6) Apply sealant EC801 to all screws and area around housing where sealant has been disturbed.

(7) Attach drain valve cable. Remove clamp from valve.

(8) Install toilet tank top (refer to Removal/Installation Toilet Waste Tank Top).

(9) Install toilet shrouds (refer to Removal/Installation Toilet Shrouds).

(10) Perform operational check (refer to Adjustment/Test Flushing Toilet Leak and Operational Check).

(11) Restore airplane to normal configuration.

2. Adjustment/Test Toilet Drain Valve

A. General.

The two aft toilet drain valves are actuated by a single control handle located on the aft lavatory service panel. The drain handle is connected to a cable that tees and attaches to the two aft toilet drain valves. Control of the forward toilet drain valves is similar.

B. Equipment Required - None.

C. Preparation.

(1) Drain and flush aft toilets (refer to Chapter 12, SERVICING).

(2) Remove toilet shrouds from two aft toilets (refer to 38-2-2).

D. Adjust Aft Toilet Drain Valves.

(1) Station one man in aft toilet area and one man at aft lavatory service panel.

(2) Adjust cables on aft toilet drain valves so that drain handles extend 1/4 inch from closed position before drain valve begins to unseat.

NOTE: Cables are adjusted by turnbuckles located just below toilet drain valve housing connecting point.

(3) Perform operational check (refer to adjustment/Test Flushing Toilet Leak and Operational Check).

(4) Restore airplane to normal configuration.

TOILET WASTE TANK - MAINTENANCE PRACTICES

(This section, 38-2-5, is applicable to airplanes CV1 through CV34.)

1. Removal/Installation Toilet Waste Tank (see Figure 201)

A. General.

The following procedure is for the aft left-hand lavatory toilet waste tank. The procedure is similar for the aft right-hand and the two forward lavatories toilet waste tanks.

B. Equipment Required. None.

C. Remove Toilet Waste Tank.

WARNING: THOROUGHLY WASH, FLUSH, AND RINSE ALL EXPOSED OR CONTAMINATED AREAS ON TOILET EXTERIOR WITH A STRONG DISINFECTANT PRIOR TO HANDLING.

(1) Drain and flush tank per instructions placarded on aft lavatories service panel.

(2) Remove three AFT COMMODE limiters from ac power distribution box.

(3) Remove toilet shrouds (refer to Removal/Installation Toilet Shrouds).

(4) Remove toilet tank top (refer to Removal/Installation Toilet Waste Tank Top).

(5) Disconnect drain valve cable at turnbuckle above lavatory floor. Restrict cable remaining in airplane to prevent end from slipping through hole in drip pan to area underneath floor.

(6) Remove eight screws and disconnect drain line from bottom of tank.

(7) Remove bolts that attach tank to mounting brackets.

(8) Remove tank from airplane.

D. Install Toilet Waste Tank.

(1) Position tank on mounting brackets in lavatory.

(2) Attach tank to mounting brackets with bolts.

(3) Attach drain line to bottom of tank with eight screws.

(4) Attach drain valve cable.

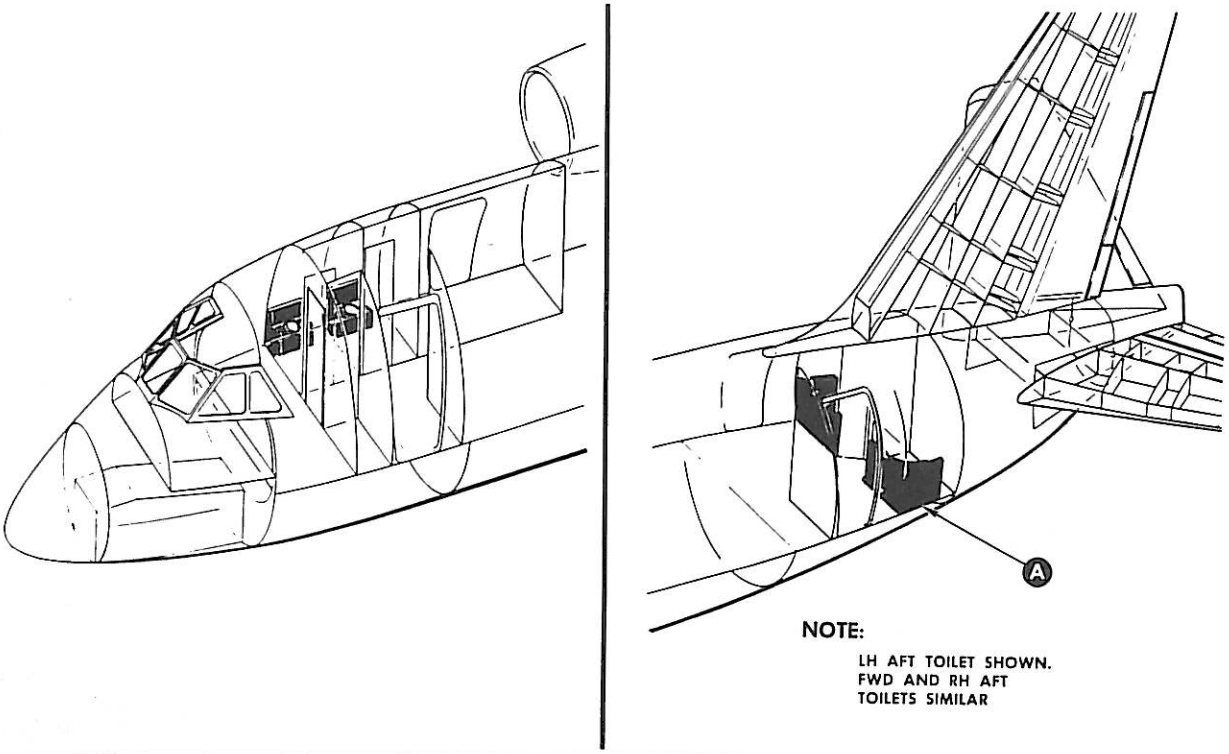
A
NOTE:
LH AFT TOILET SHOWN.
FWD AND RH AFT
TOILETS SIMILAR

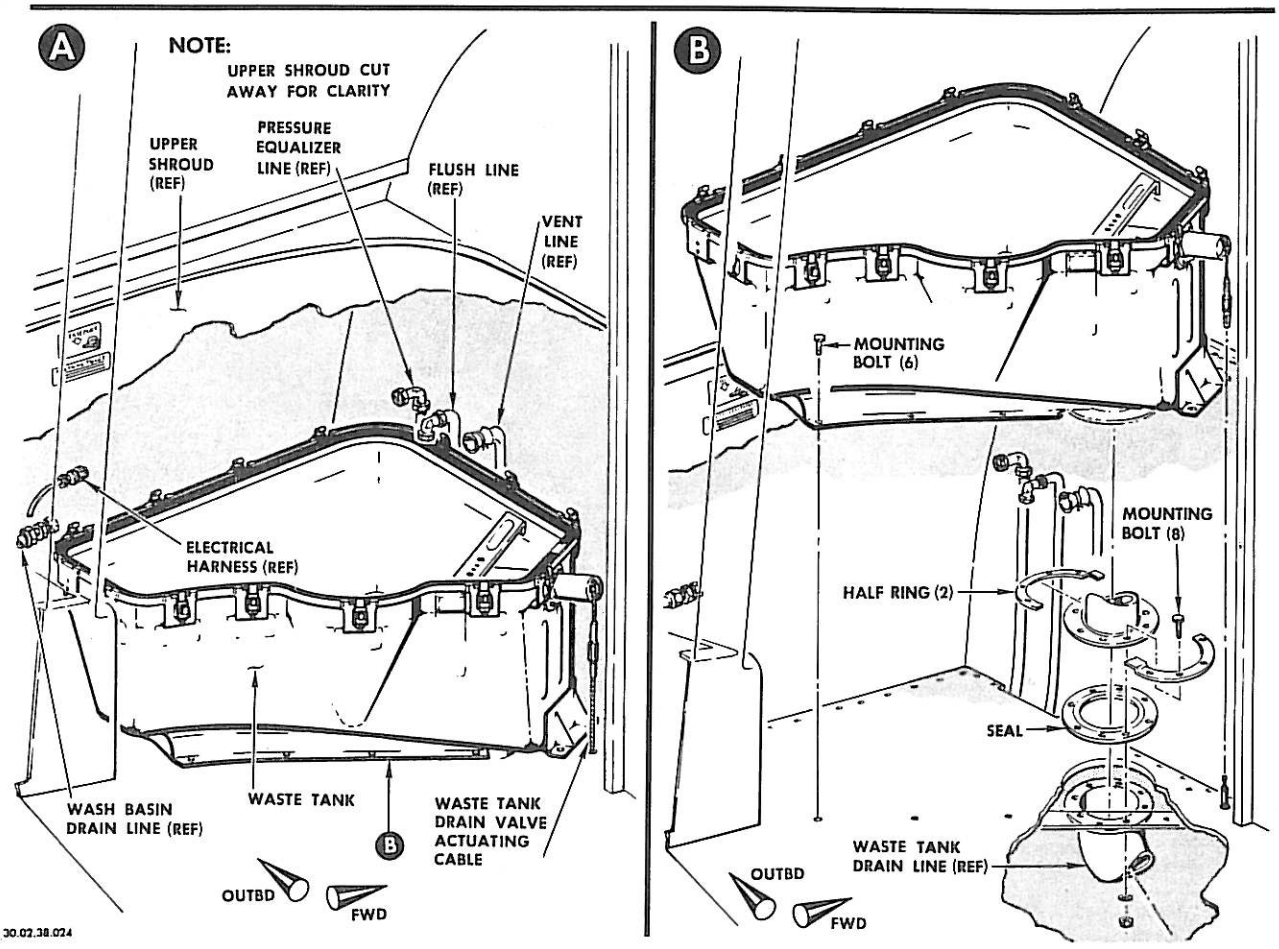
A
NOTE:
UPPER SHROUD CUT
AWAY FOR CLARITY
UPPER
SHROUD
(REF)
PRESSURE
EQUALIZER
LINE (REF)
FLUSH LINE
(REF)
VENT
LINE
(REF)
ELECTRICAL
HARNESS (REF)
WASH BASIN
DRAIN LINE (REF)
WASTE TANK
B
WASTE TANK
DRAIN VALVE
ACTUATING
CABLE
OUTBD
FWD
30.02.38.024
B
MOUNTING
BOLT (6)
MOUNTING
BOLT (8)
HALF RING (2)
SEAL
WASTE TANK
DRAIN LINE (REF)
OUTBD
FWD

(5) Install toilet tank top (refer to Removal/Installation Toilet Waste Tank Top).

(6) Install toilet shrouds (refer to Removal/Installation Toilet Shrouds).

(7) Perform operational check (refer to Adjustment/Test Flushing Toilet Leak and Operational Check).

(8) Restore airplane to normal configuration.

WASTE SYSTEM

(This section, 35-3-0, is applicable to airplanes CV35 and ON.)

1. General

The waste system consists of four waste storage tanks, two service panels, and the associated plumbing from the lavatory wash basins, as shown in Figure 1. The tanks are located below the toilet in each lavatory and are used as storage containers for all toilet waste and waste water from the wash basins. Waste from the toilet goes directly to the storage tank. Flushing rings, integral with the top of the bowl and tank, are utilized to wash waste from the bowl and tank during ground servicing. Wash basin waste water drains into the storage tank when the manual sink stopper is operated. Two external ground service panels, one for the aft lavatories and one for the forward lavatories, provide draining and flushing facilities for ground servicing.

A check valve (see Figure 2), installed in the forward lavatory wash basin drain line, vents the waste tank to lavatory pressure. This venting action prevents any pressure differential which might otherwise occur if the top of the toilet should become sealed.

2. Toilet and Sump Tank

The toilet is fabricated from 0.040 to 0.060-inch fiberglas and mounts on top of the sump tank with its upper surface attached to the lavatory panel. Each of the two aft lavatory sump tanks have a capacity of 20 gallons while the forward lavatory tank has a capacity of 30 gallons. The toilet incorporates an integral flushing ring to aid in waste disposal and outlet fitting that is tube-connected to the drain line to equalize cabin pressure in the drain line between the drain valve and the drain line cap. The waste storage (sump) tanks are set in 0.020-inch fiberglas trays attached to the top surface of the floor beams and are located directly below the toilets. The trays provide additional protection in the event of a leak in the sump tank. An integral flushing ring is installed at the top of the tank which works in conjunction with the toilet flushing ring during ground servicing. The drains for the two aft toilets run singly to a point directly over the service panel where they interconnect to form a single servicing point similar to the forward service panel. The tank drain lines are fabricated from fiberglas and have a four-inch diameter opening. The tanks are treated with a deodorant solution (refer to Chapter 12, SERVICING) and are vented overboard. The vent lines contain an integral venturi to restrict out-flow. The flushing lines and fittings are fabricated from stainless steel.

3. Drain Valves

The drain valve (see Figure 1) is operated from the ground service panel when the drain handle is pulled. This handle action is transmitted to the valve by a series of pulleys and cabling. From the handle on the X service panel, a single cable routes upward to a connection point where a double

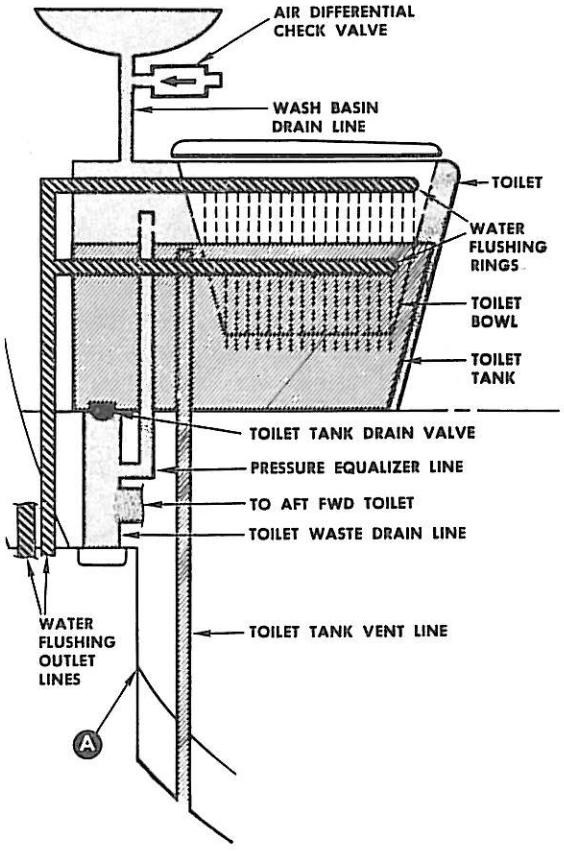

FORWARD LAVATORY (TYPICAL)
VIEW LOOKING AFT

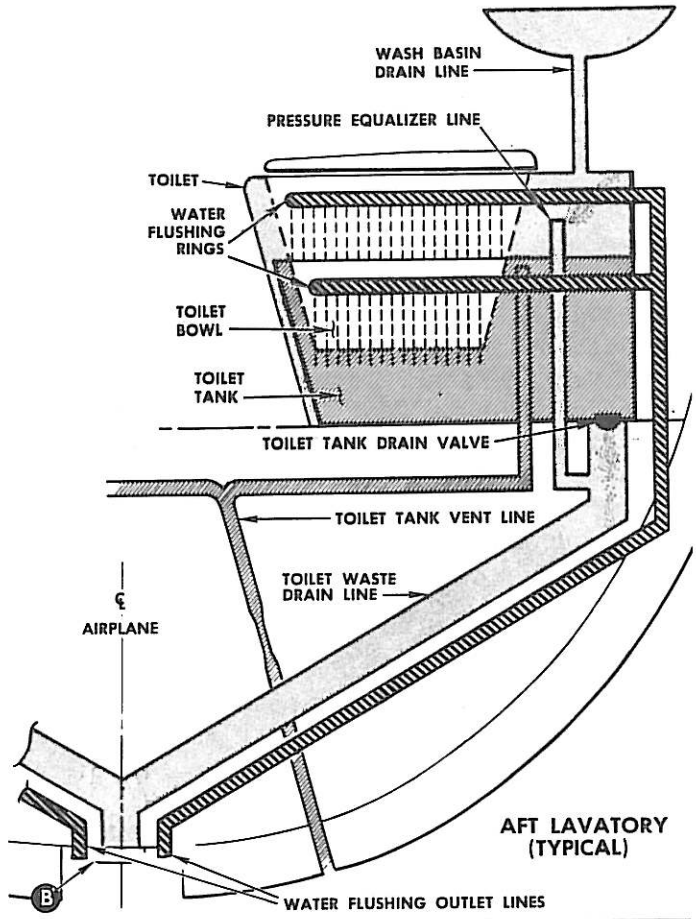

AFT LAVATORY (TYPICAL)

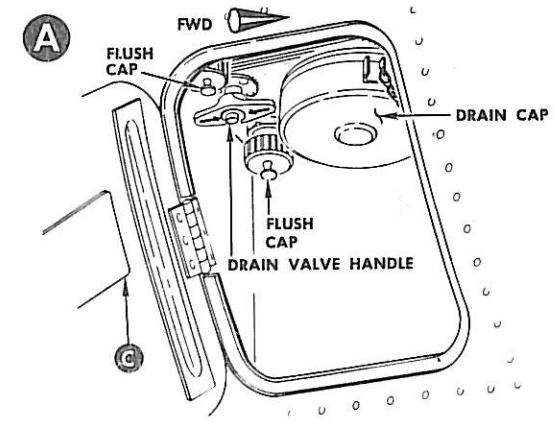

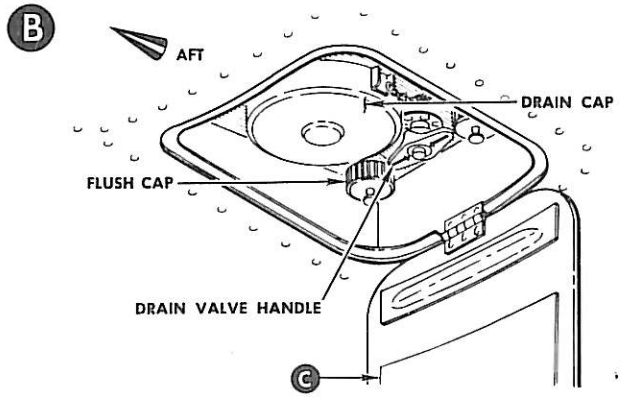

C

CAUTION: DO NOT PULL DRAIN HANDLE UNTIL DRAIN HOSE HAS BEEN CONNECTED.

1. REMOVE DRAIN AND FLUSH CAPS.
2. CONNECT DRAIN AND FLUSH HOSES.
3. OPEN DRAIN VALVE BY DEPRESSING BUTTON IN CENTER OF HANDLE AND PULL (PULL HANDLE ALL THE WAY DOWN BEFORE RELEASING BUTTON).
4. FLUSH TANK.
5. CLOSE DRAIN VALVE BY DEPRESSING BUTTON IN CENTER OF HANDLE AND PUSHING HANDLE ALL THE WAY UP.
6. DISCONNECT HOSES AND REPLACE DRAIN AND FLUSH CAPS.

DOOR PLACARD (TYPICAL)

30.02.38.030

Water Waste System Schematic
Figure 1

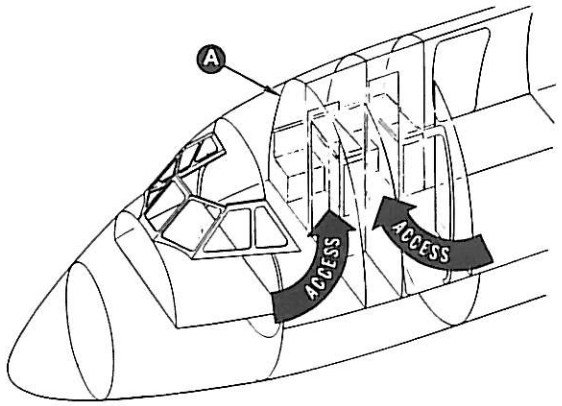

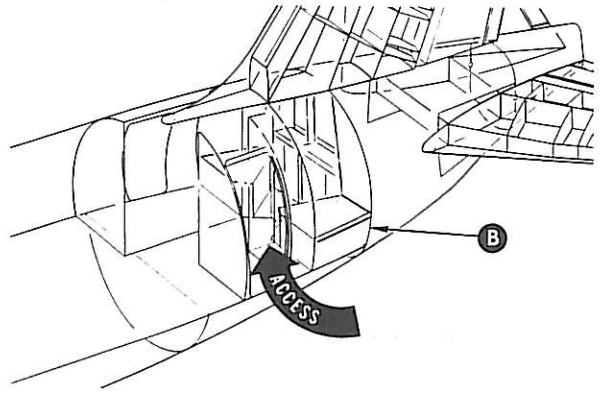

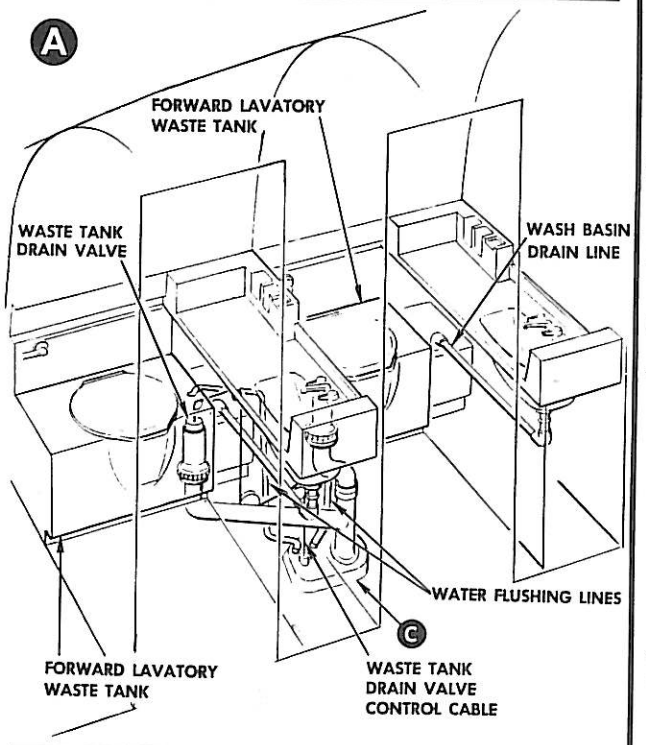

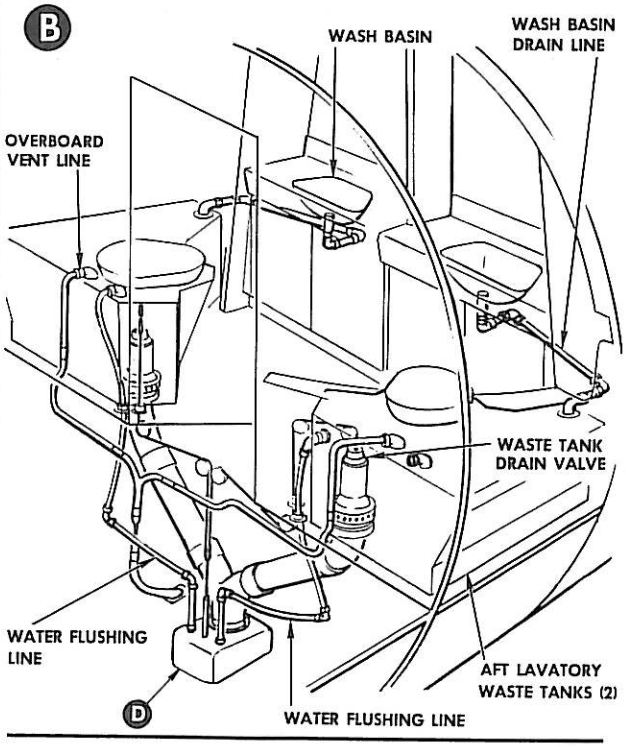

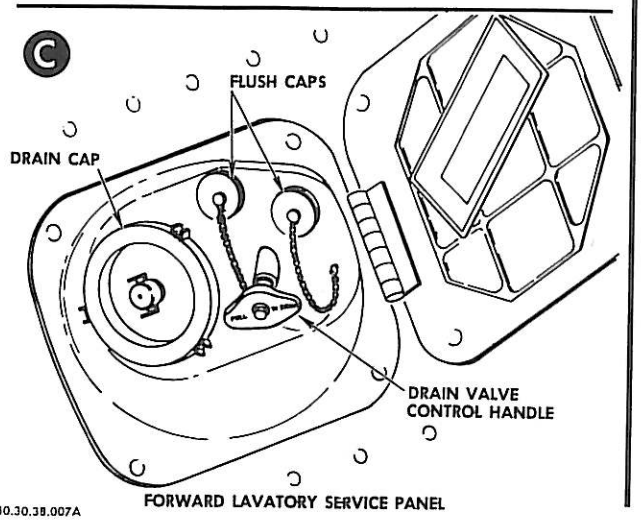

FORWARD LAVATORY SERVICE PANEL

30.30.38.007A

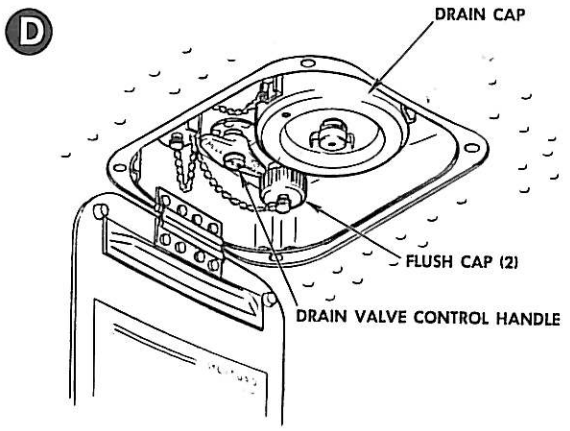

AFT LAVATORY SERVICE PANEL

cable fitting is attached. These cables run singly over pulleys for a change in direction to a recessed panel on each sump tank where the drain valve mechanism is installed. From this recessed panel on the sump tank, the cable runs down through a housing of the drain valve and attaches to the movable portion of the valve. When the drain valve handle is pulled, the movable portion of the valve telescopes into the housing and allows the waste material in the sump to escape. The movable portion of the valve is spring-loaded to the closed position, and will return to the closed position when the handle is released.

4. Service Panels

The forward lavatory ground service panel is located just below the forward main entrance door at station 347; the aft ground service panel is located at BL 0.0 and station 1331 and extends about four inches on either side of the airplane centerline. Both panels are recessed into the outer fuselage skin, and are accessible through their respective hinged access doors that are retained in the closed position by four Camloc fasteners. The aft panel incorporates a waste drain outlet fitting, two flushing fittings and a remote control drain handle for operating the drain valve. The forward ground service panel is similar to the aft panel. Servicing is accomplished by opening the access doors and following the instructions placarded on the inside surface of the door.

WASTE SYSTEM - TROUBLE SHOOTING

(This section, 38-3-0, is applicable to airplanes CV35 and ON.)

POSSIBLE CAUSE	ISOLATION PROCEDURE AND CORRECTION
1. ODORS EMANATE FROM TOILET TANK UNIT	
A. Improper servicing of toilet system.	Drain and flush toilet system; insure that recommended service procedure is being followed; including use of proper chemical solution (refer to Chapter 12, SERVICING).
2. LIQUID IN DRAIN LINE AT GROUND SERVICE PANEL PRIOR TO OPENING DRAIN VALVE	
A. Damaged or obstructed drain valve.	If valve is obstructed, remove obstruction; if valve is damaged, replace valve.

TOILET SHROUD - MAINTENANCE PRACTICES

(This section, 38-3-1, is applicable to airplanes CV35 and ON.)

1. Removal/Installation Toilet Shroud (see Figure 201)

   A. Equipment Required - None.

   B. Remove Toilet Shroud.

      (1) Remove rubber seal from three sides of lavatory ceiling panel.

      (2) Remove screws from around ceiling panel and remove panel.

      (3) Unlock fastener at top of toilet paper holder and let holder swing down.

      (4) Remove mounting screws from interior of storage compartment behind paper holder and remove compartment.

      (5) Remove toilet assist handle.

      (6) All mounting screws are now accessible; remove screws and remove shroud.

   C. Install Toilet Shroud.

      (1) Place lower shroud in position and install mounting screws across bottom.

      (2) Place upper shroud in position and install mounting screws in forward side of shroud and across top of shroud back.

      (3) Slide paper holder compartment into position and install mounting screws.

      (4) Position toilet assist handle and install mounting screws.

      (5) Position ceiling panel and install screws.

      (6) Install rubber seal around three sides of panel.

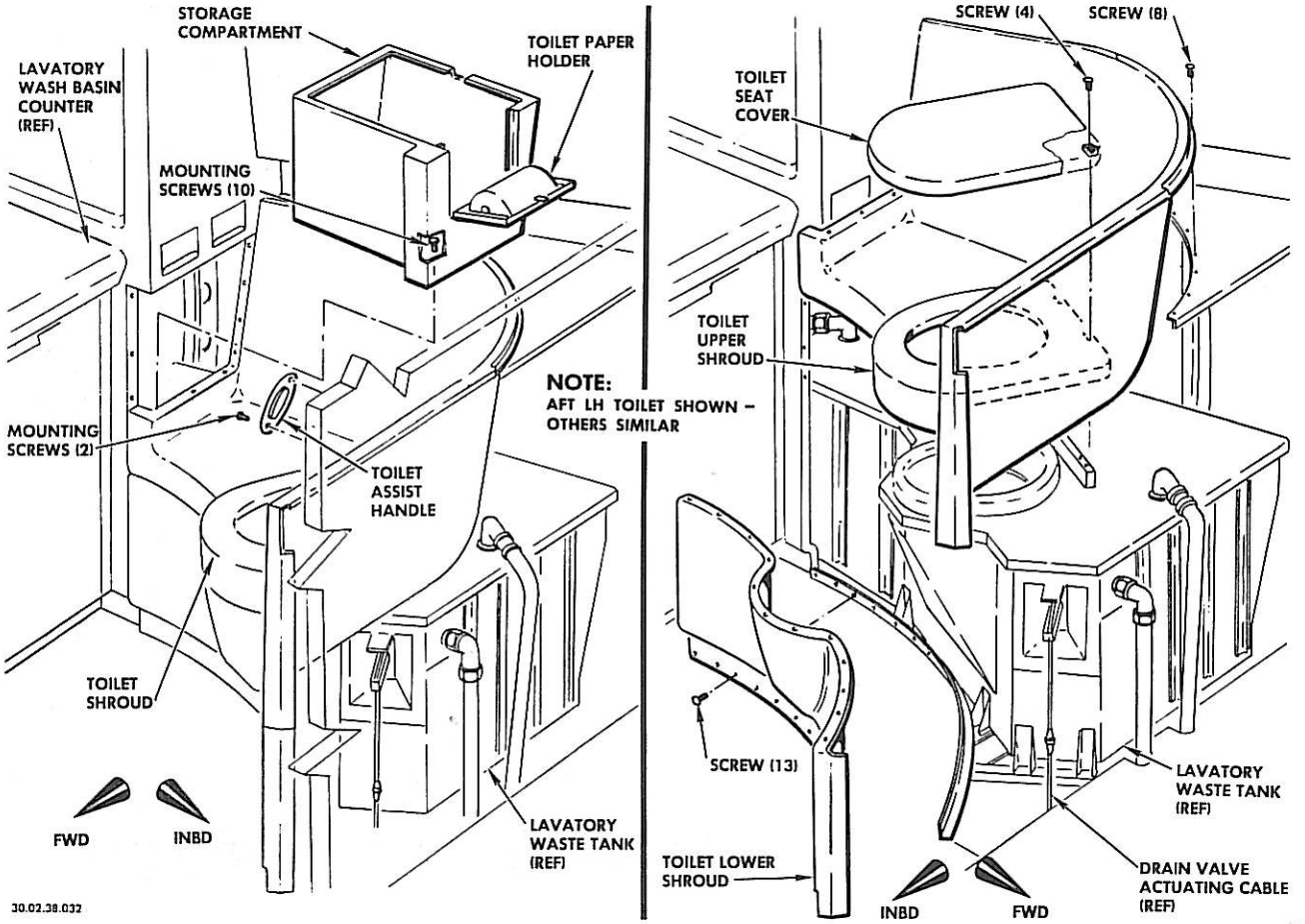
STORAGE COMPARTMENT
TOILET PAPER HOLDER
LAVATORY WASH BASIN COUNTER (REF)
MOUNTING SCREWS (10)
MOUNTING SCREWS (2)
TOILET ASSIST HANDLE
TOILET SHROUD
FWD
INBD
LAVATORY WASTE TANK (REF)
30.02.38.032
NOTE:
AFT LH TOILET SHOWN – OTHERS SIMILAR
SCREW (4)
SCREW (8)
TOILET SEAT COVER
TOILET UPPER SHROUD
SCREW (13)
TOILET LOWER SHROUD
INBD
FWD
LAVATORY WASTE TANK (REF)
DRAIN VALVE ACTUATING CABLE (REF)

LAVATORY WASTE TANK - MAINTENANCE PRACTICES

(This section, 38-3-2, is applicable to airplanes CV35 and ON.)

1. Removal/Installation Lavatory Waste Tank (see Figure 201)

   A. Equipment Required - None.

   B. Remove Lavatory Waste Tank.

      (1) Remove toilet shroud (refer to 38-3-1).

      (2) Disconnect drain valve actuating cable at turnbuckle above lavatory floor. Restrict cable remaining in airplane to prevent end from slipping through hole in drip pan to area underneath floor.

      (3) Disconnect waste tank vent line, pressure equalizer line (forward and RH aft lavatory waste tanks), wash basin drain line, ground service flush line, and waste tank drain line. (Cap ends of lines.)

      (4) Remove bolts attaching tank to lavatory floor.

   C. Install Lavatory Waste Tank.

      (1) Position waste tank on drip pan.

      (2) Install mounting bolts.

      (3) Remove protective caps and connect waste tank vent line, pressure equalizer line (forward and RH aft lavatory waste tanks), wash basin drain line, ground service flush line, and waste tank drain line.

      (4) Connect drain valve actuating cable and adjust turnbuckle to remove slack from cable.

      (5) Install toilet shroud (refer to 38-3-1).

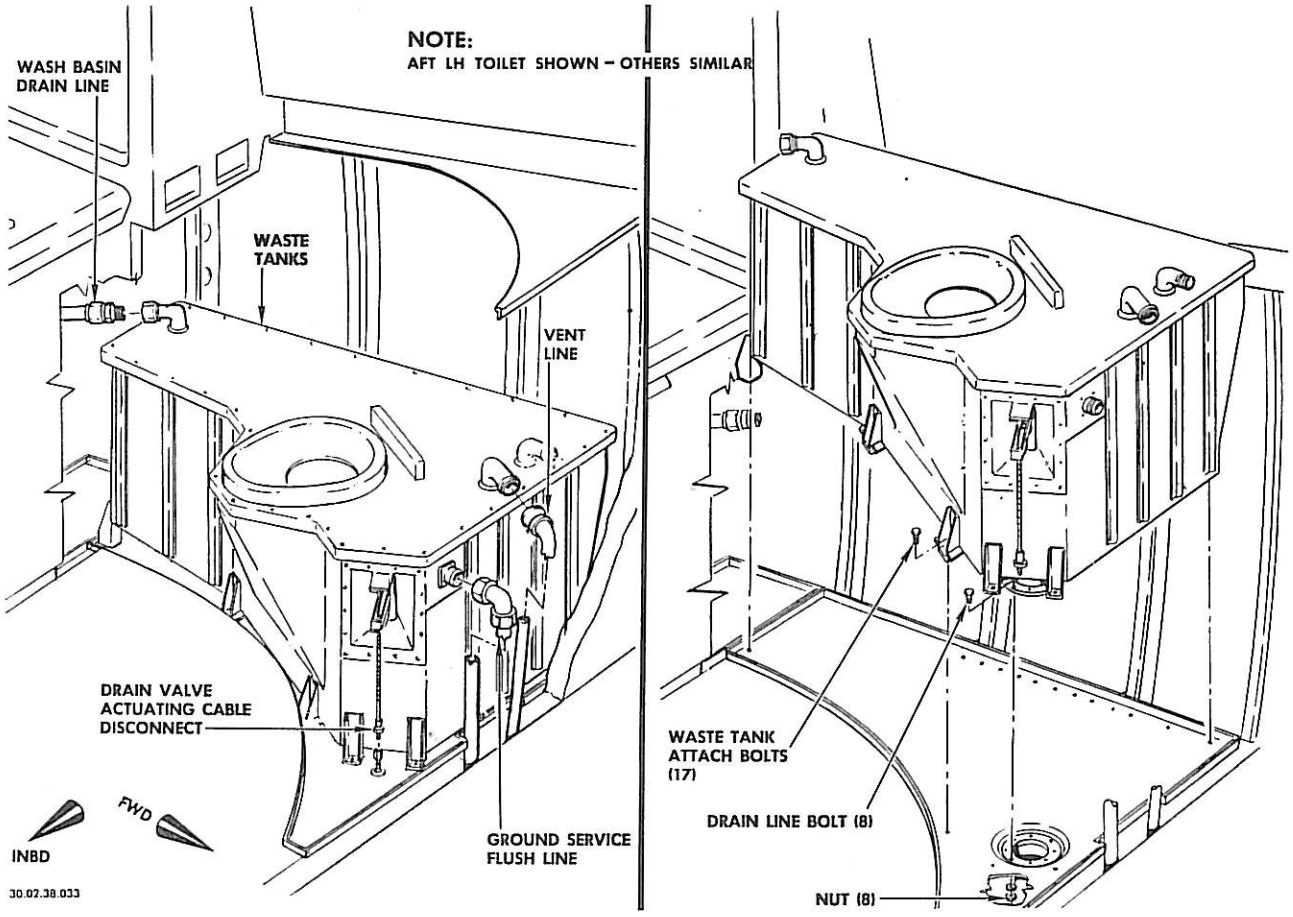
NOTE:
AFT LH TOILET SHOWN – OTHERS SIMILAR
WASH BASIN DRAIN LINE
WASTE TANKS
VENT LINE
DRAIN VALVE ACTUATING CABLE DISCONNECT
FWD
INBD
GROUND SERVICE FLUSH LINE
30.02.38.033
WASTE TANK ATTACH BOLTS (17)
DRAIN LINE BOLT (8)
NUT (8)

LAVATORY DRAIN VALVE - MAINTENANCE PRACTICES

(This section, 38-3-3, is applicable to airplanes CV35 and ON.)

1. Removal/Installation Lavatory Drain Valve (see Figure 201)

   A. Equipment Required - None.

   B. Remove Drain Valve (Typical).

      NOTE: To gain access to forward lavatory drain valve, open access door in partition at fuselage station 360. To gain access to aft lavatory drain valves, remove respective lower lavatory shroud.

      (1) Remove screws from recessed panel in front of lavatory tank.

      (2) Pull panel inboard and remove panel and valve as a unit.

      (3) Disconnect valve actuating cable above floor. Restrict cable remaining in airplane to prevent end from slipping through hole in drip pan to area underneath floor.

   C. Install Drain Valve (Typical).

      (1) Apply 0.03-inch coat of W.P. Fuller No. RL3868 Zinc Chromate Paste, or equivalent, to gasket contact surfaces.

      (2) Place valve in position over drain hole in waste tank.

      (3) Install screws in recessed panel in front of waste tank.

      (4) Connect valve actuating cable above floor.

      (5) Close access door (forward lavatory). Install lower lavatory shroud (aft lavatory).

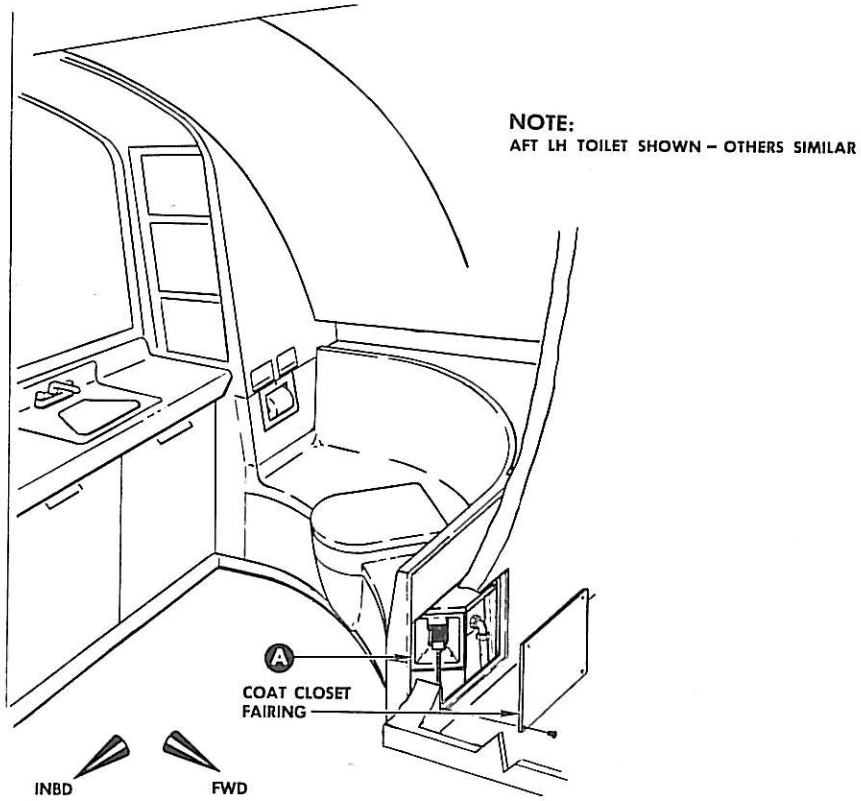

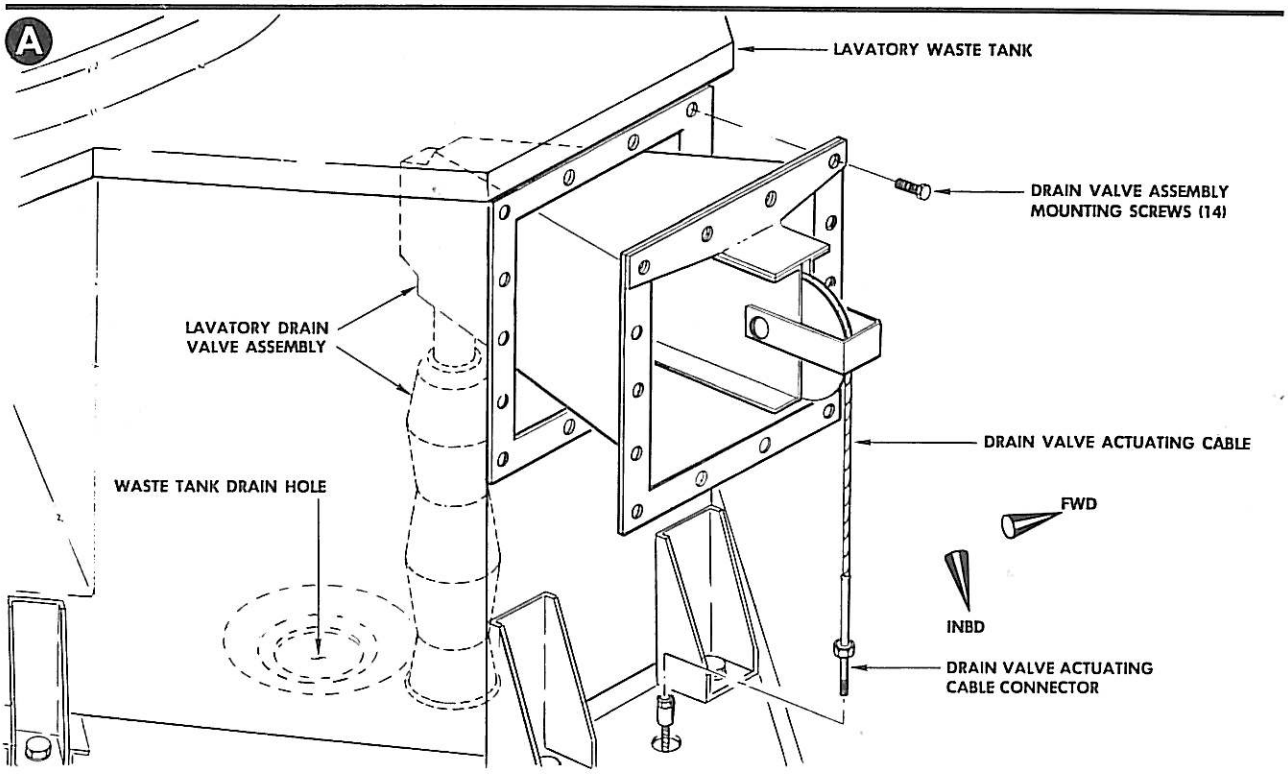

30.02.38.034

Lavatory Waste Tank Drain Valve Installation
Figure 201